INSTALL GUIDE

Alaska Polycarbonate Door With Strapeze® Counterbalance

&

Alaska Polycarbonate Door With Torsion Springs

AIRLIFT

AIRLIFT DOORS, INC.
TOLL FREE: 888-368-4403
WWW.AIRLIFTDOORS.COM

IMPORTANT

1. Before you begin installation, read instructions thoroughly. Failure to comply with these instructions may void product warranties.
2. Make sure to check all measurements before beginning installation.
3. Check for any missing pieces. If your door is missing any pieces, call the toll free number on the front of this manual immediately.
4. This manual was designed for installation with two people.
5. All instructions are given from the point of view inside the structure looking out.
6. We recommend that installation and or repair of garage doors be performed by a qualified garage door installer.

SAFETY INFORMATION

To avoid injury read the following safety guidelines carefully. Be sure to follow the installation steps very closely throughout the guide.

1. Two people are required to install this door.
2. If removing an existing door, be sure to contact the manufacturer of the existing door and get instructions on how to safely remove the torsion springs or counterbalance system and properly remove the door.
3. Only the supplied hardware should be used when installing this door. Do not substitute withoutwritten consent from the manufacturer.
4. Many parts have sharp edges. Use caution when handling all parts to avoid cuts or punctures.
5. A bolt or bumper must be installed at the back of the horizontal tracks to keep the door from rolling off the back of the tracks.
6. The horizontal track must be supported properly to keep the door weight from pulling the track down from the ceiling and keep the track from spreading which may allow the door to fall and cause severe damage or injury.
7. Follow instructions carefully when working with the counterbalance system. Failure to do so may result in uncontrolled release of the torsion spring or uncontrolled release of the counterweights causing serious or fatal injury.
8. By undertaking the installation of this door, the installer understands the dangers associated with the installation. Airlift Doors, Inc. is not responsible for any and all liability resulting in injury and/or death derived from improper or careless installation.

Door Clearance Measurements

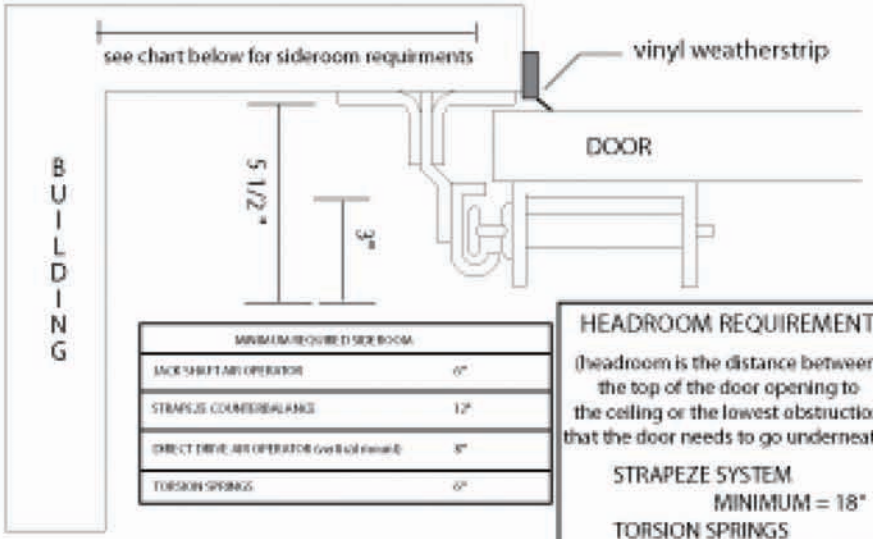

MINIMUM REQUIRED SIDEROOM	
JACK SHAFT AIR OPERATOR	6"
STRAPEZE COUNTERBALANCE	12"
DIRECT DRIVE AIR OPERATOR (vertical mount)	8"
TORSION SPRINGS	6"

HEADROOM REQUIREMENTS

(headroom is the distance between the top of the door opening to the ceiling or the lowest obstruction that the door needs to go underneath)

STRAPEZE SYSTEM
MINIMUM = 18"
TORSION SPRINGS
MINIMUM = 16"

WE SUGGEST AND REQUEST 24" OF HEADROOM

Minimum Door Clearance Requirements

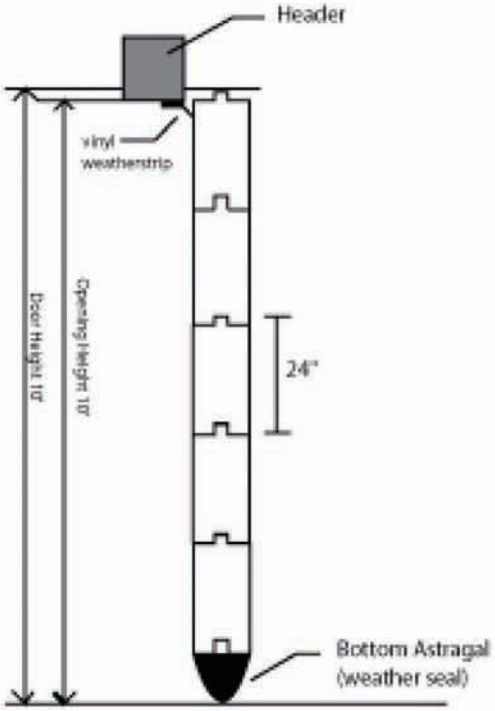

SIDE ELEVATION

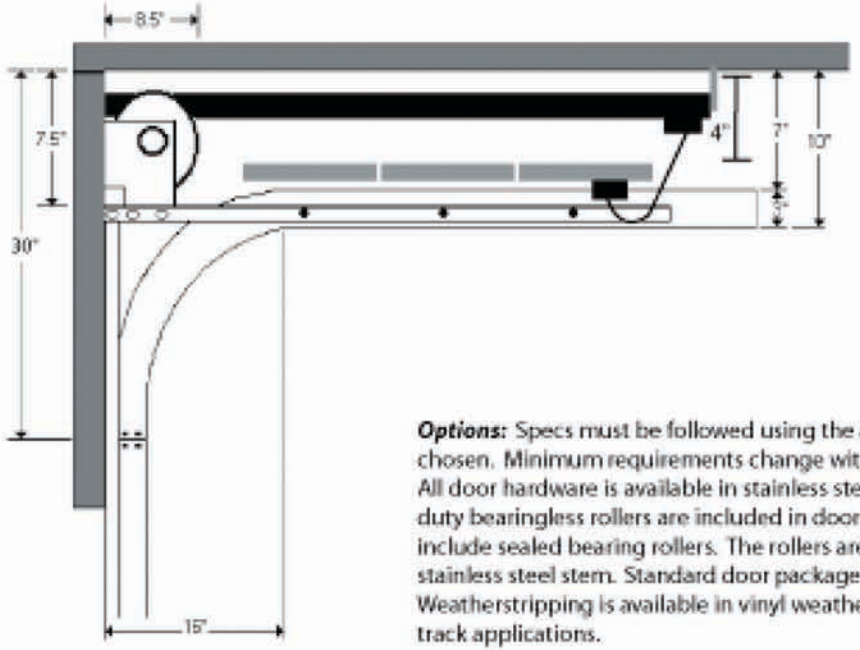

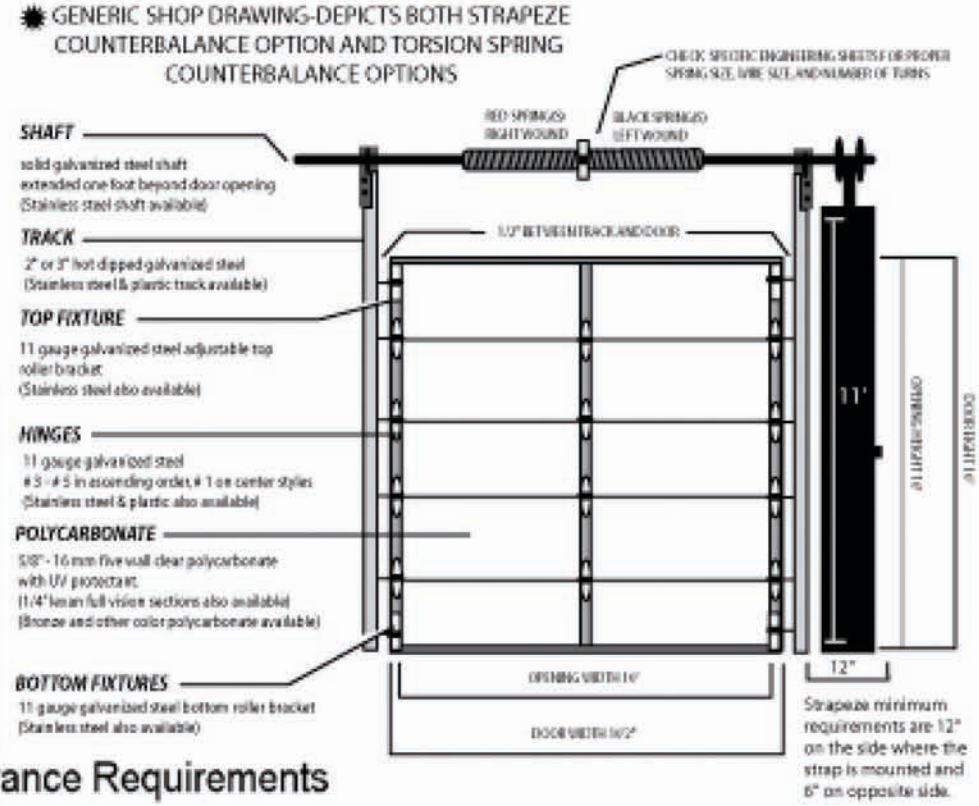
GENERIC SHOP DRAWING-DEPICTS BOTH STRAPEZE COUNTERBALANCE OPTION AND TORSION SPRING COUNTERBALANCE OPTIONS

Strapeze minimum requirements are 12" on the side where the strap is mounted and 6" on opposite side.

GENERAL NOTES:

Stiles and Rails: Side rails shall be .080 inch aluminum, top and bottom rails shall be .080, reinforced to 0.25 inches thick at all stress points, and sloped to eliminate water accumulation.

Mounting: Recommend mounting 2"X8" treated wood to wall then tracks to wood. this creates a thermal break between wall and tracks, which will help with any icing problems.

Options: Specs must be followed using the appropriate measurements for the options chosen. Minimum requirements change with counterbalance and operator options. All door hardware is available in stainless steel, plastic, or nickel plated options. Heavy duty bearingless rollers are included in door packages up to 14' X 10'. Doors over this size include sealed bearing rollers. The rollers are U.H.M.W. polyethylene plastic and have a 7/16" stainless steel stem. Standard door packages also include 1" solid keyed galvanized shaft. Weatherstripping is available in vinyl weatherstrip or clip seal weatherstrip for reverse angle track applications.

Hardware for 10X 10 Door (Quantities will vary with door size)

Polycarbonate Bottom Section	1	Standard 400-144 RH Drum	1
Polycarbonate Intermediate Section	4	Standard 400-144 LH Drum	1
Galvanized Springs With Winding Hubs	1	Galvanized #1 Hinge	4
Galvanized Shaft	1	Galvanized #3 Hinge	2
Galvanized Face Hardware Fastener Kit	1	Galvanized #4 Hinge	2
Galvanized Shaft Fastner Kit	1	Galvanized #5 Hinge	2
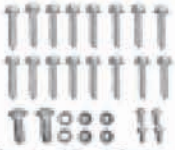 Galvanized Track Fastner Kit	1	Galvanized #6 Hinge	2
Galvanized Vertical Track	2	Galvanized Bottom LH Bracket	1
Horizontal Vertical Track	2	Galvanized Bottom RH Bracket	1
S.S. Cable 5/32	1	Galvanized Top Fixture	2

Note: Material of parts may change based on model of door

Hardware for 10x10 door (Quantities will vary with door size)

Galvanized Lift Handle	1	5 Pound Weight *(Strapeze Doors Only)*	1
Yellow Rope	1	18.0 Pound Weight *(Strapeze Doors Only)*	6
3" Bearingless Roller	12	Strapeze Rod *(Strapeze Doors Only)*	1
Galvanized LH Center Bearing Plate	1	Strapeze Guide Tube *(Strapeze Doors Only)*	1
Galvanized RH Center Bearing Plate	1	Strap *(Strapeze Doors Only)*	1
Galvanized RH & LH Bearing Plates w/Std Bearings	1	Strapeze Kit *(Strapeze Doors Only)*	1
1" Standard Freeway Bearing *(Spring Doors Only)*	1		
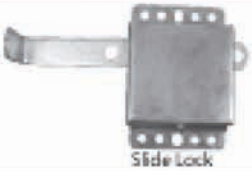 Slide Lock	1		

Note: Material of parts may change based on model of door or upgrades chosen.

STEP 1 - MEASURE OPENING

1-1: Measure the door opening width and height to ensure the door you received will fit properly.

NOTE Generally the width of the door panels will be 2" wider than the door opening. A 10'0" wide opening will have a 10'2" wide door.

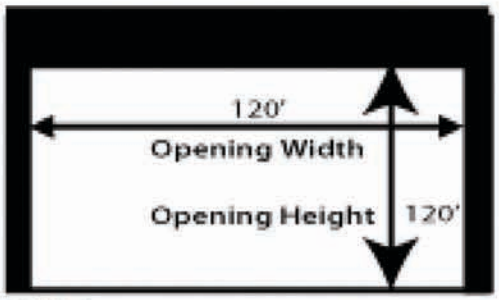

FIG. 1-A

STEP 2 - MEASURE VERTICAL TRACK LENGTH

2-1: As a general rule of thumb, the length of the vertical track will be 30" less than the ceiling height. However, in special applications this measurement may vary. Consult factory if your measurement results are different than stated.

FIG. 2-A

2-2: Measure from the floor to the ceiling and subtract 30".

2-3: Measure from the bottom of the vertical track to the end of the vertical track rail. The rail is where the door rollers will actually roll in. (FIG. 2-B & FIG. 2-C)

2-4: If your ceiling height minus 30" does not equal the length of the vertical track please consult the factory before proceeding.

FIG. 2-B

EXAMPLE 1
- Ceiling Height = 144"
- Ceiling Height - 30" = 114"
- Vertical Track Length = 114"

OK TO PROCEED

EXAMPLE 2
- Ceiling Height = 146"
- Ceiling Height - 30" = 116"
- Vertical Track Length = 114"

TRACK IS MOST LIKELY OKAY, BUT CONSULT FACTORY BEFORE PROCEEDING TO MAKE SURE.

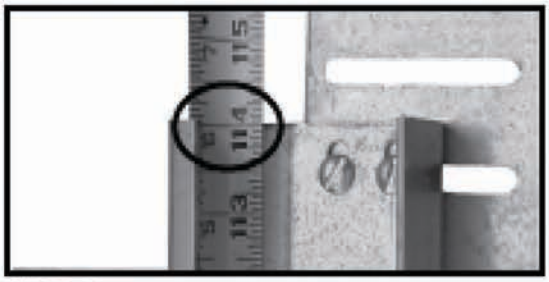
FIG. 2-C

Open the hardware boxes and organize hardware in groups so that you can easily locate them. Place all of your door sections onto saw horses, with the bottom section on the top. (FIG. 3-A)

⚠ *All sections are identical except for the bottom section Which has the Black Astragal and Retainer on the bottom. This section will be the first to be assembled.*

FIG. 3-A

Continue with step 3 if you have galvanized hinges. Skip to step 6 on page 6 if you have stainless steel or plastic hinges.

STEP 3 - INSTALLING BOTTOM BRACKETS

Step 3-1: Take the right hand bottom bracket and place the cable loop in between the two bracket holes. (FIG. 3-B)

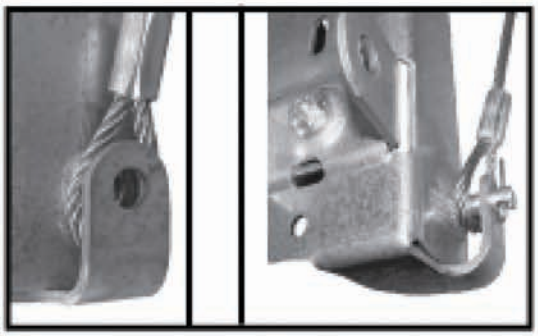

FIG. 3-B FIG. 3-C

Step 3-2: Insert clevis pin through both holes to hold cable in place. Insert the cotter key through the hole in the end of the clevis pin. (FIG. 3-C)

Repeat steps 3-2 & 3-3 for the left hand bottom bracket.

Cotter Key

Clevis Pin

Self-Tapping Screw

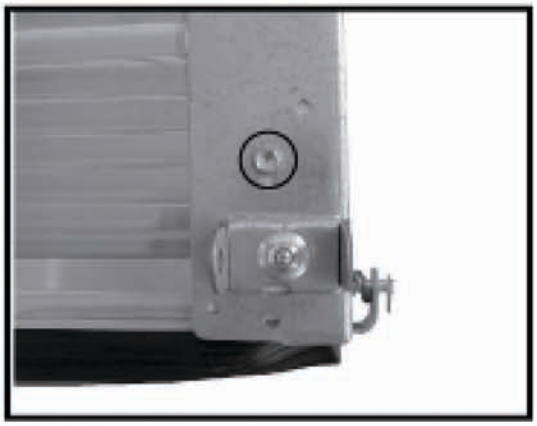

FIG. 3-D

Step 3-3: **Next screw bottom fixtures to bottom section with** a self-tapping screw. Slide the bottom fixture onto the bottom of the bottom section. Align the pre-drilled hole in bracket with the pre-drilled hole in the section to ensure correct placement of the bracket. (FIG. 3-D)

**Note: The edge of the bottom bracket should be flush with the bottom of the section

Step 3-4: Screw in the remaining screws to fasten the bracket securely to the section

FIG. 3-E

Repeat step 3-3 and 3-4 for the Left Bottom Bracket

Note: Continue with step 4 if you are installing galvanized hinges. If you are installing Stainless Steel or plastic hardware please refer to step 6 of the manual on page 6.

STEP - 4 INSTALLING HINGES ON BOTTOM SECTION

Step 4-1: Place two # 3 hinges on the end stiles of the bottom section and a # 1 hinge on the center stile and screw the hinges onto the section with the hinge screws provided. Doors with more than one center stile will require a # 1 hinge on each center stile. (Fig. 4-A)

NOTE: For hinge placement on door, see (Fig. 4-C). If using 2" track instead of 3" track, you should start with a # 1 hinge on the ends instead of a # 3 and continue sequentially.

When installing hinges, make sure the number on the hinge is on the bottom facing up. Hinges should be installed on the top of each section as shown in (FIGs. 4-A & 4-B).

FIG. 4-A

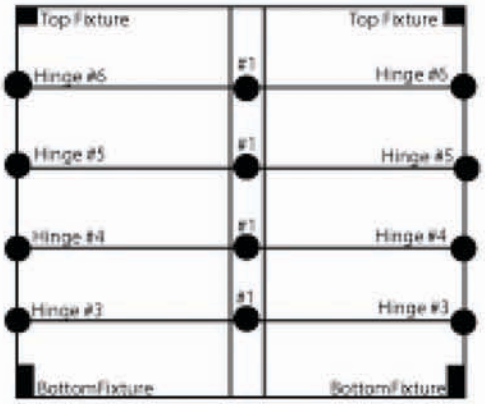

FIG. 4-C

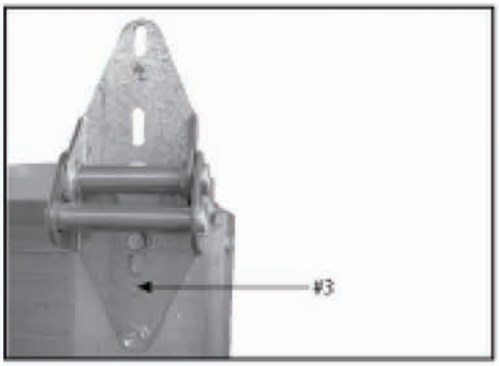

FIG. 4-B

STEP 5- INSTALLING ROLLERS ON BOTTOM SECTION

Step 5-1: Insert roller in bottom bracket. (Fig. 5-A)

Step 5-2: Install roller in the # 3 hinges outside hole farthest from the door section.

Once the bottom brackets, hinges, and rollers are fastened to the bottom section, stop and proceed to step # 8 on page 8.

SKIP TO STEP 8

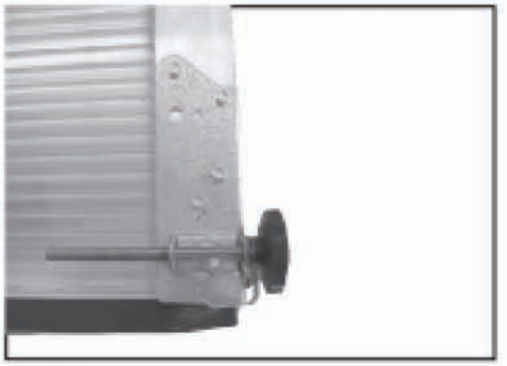

FIG. 5-A

FIG. 5-B

Continue with step 6 if you have stainless steel or plastic hinges. Skip to step 8 if you have galvanized hinges and have already installed the bottom brackets.

STEP 6 - STAINLESS STEEL BOTTOM BRACKET INSTALLATION
(Stainless steel bottom brackets are used with plastic hinges)

Left Hand Bracket | Right Hand Bracket

Step 6-1: Take the right hand bottom bracket and place the cable loop in between the two bracket holes. (FIG. 6-A)

Step 6-2: Insert the clevis pin through both holes and the the cable loop to hold the cable in place. Insert the cotter key through the hole in the end of the clevis pin. (FIG 6-A)

Step 6-3: Repeat with left side

Step 6-4: Place the right hand stainless steel bottom bracket on the section. The bottom of the bracket should line up with the bottom of the section and the center hole on the bottom bracket should line up with a pre-drilled hole in the end stile of the section. The other holes will not be pre-drilled. Use self tapping screws to fasten the bottom bracket to the section. See (FIG. 6-B) Repeat with left side.

Step 6-5: Add two more self tapping screws at the top of each bottom fixture. (FIG. 6-C)

Step 6-6: Place " U " Roller Bracket on top of bottom bracket, align holes, and attach with four self tapping screws. (FIG. 6-C) Note: Place the U-Bracket on the bottom bracket with the pre-drilled holes towards the top. Repeat with left side.

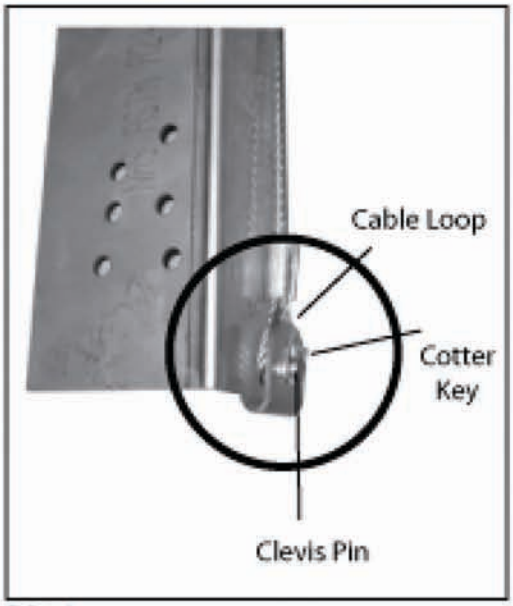

FIG 6-A

There are two holes in the stainless steel bottom fixtures in which to put rollers.

Step 6-7: Insert roller in the hole farthest from door section for 3" track (FIG. 6-D & 6-E)

Note: Insert roller in the hole closest from the door for 2" track (FIG. 6-D & 6-E)

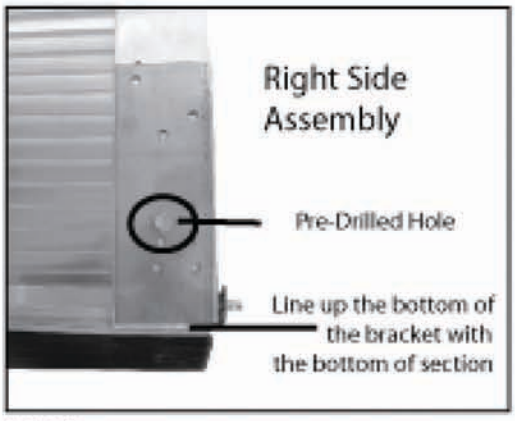

FIG. 6-B

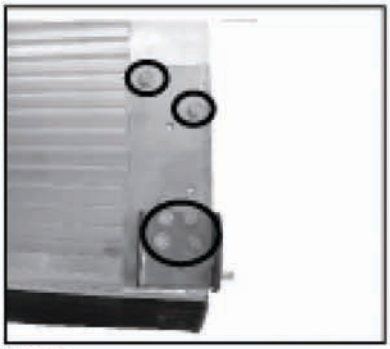

FIG. 6-C

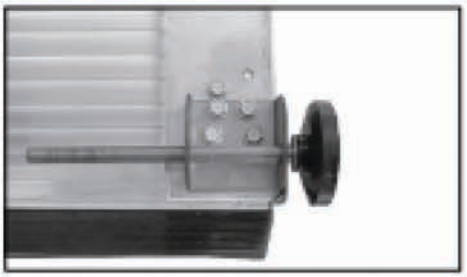

FIG. 6-D

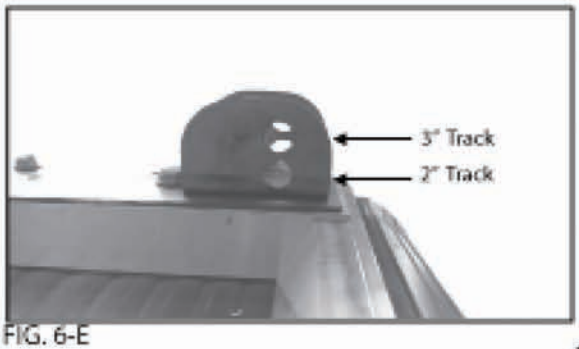

FIG. 6-E

STEP - 7 INSTALLING STAINLESS STEEL HINGES ON BOTTOM SECTION

NOTE: Place anti-corrosion stickers on back of hinges before installation.

Step 7-1: Place two # 3 hinges on the end stiles of the bottom section and a # 1 hinge on the center stile and screw the hinges onto the section with the hinge screws provided. Doors with more than one center stile will require a # 1 hinge on each center stile. (Fig. 7-A)

For hinge placement on door see (FIG. 7-C)

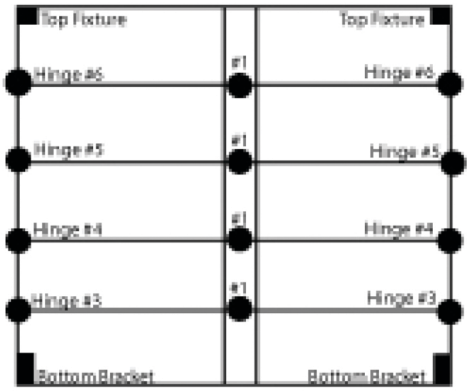

FIG. 7-C

NOTE: If using 2" track instead of 3" track, you should start with a # 1 hinge on the ends instead of a # 3 and continue sequentially.

When installing hinges, make sure the number on the hinge is on the bottom facing up. Hinges should be installed on the top of each section as shown in (FIGs. 7-A & 7-B).

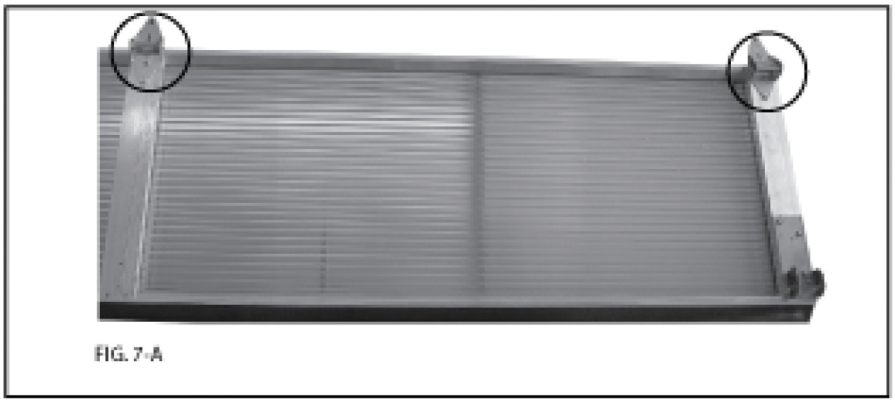
FIG. 7-A

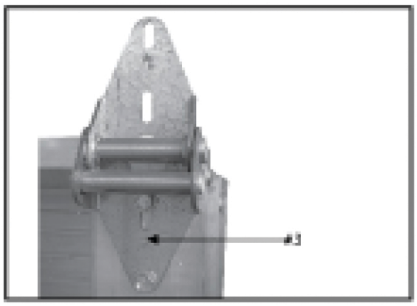

FIG. 7-B

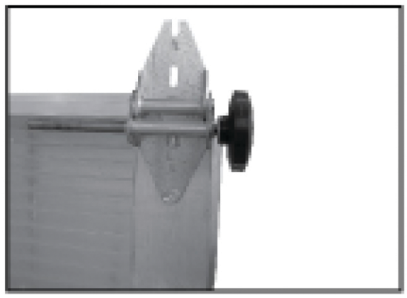
FIG. 7-D

Step 7-2: Install a roller in the # 3 hinges in the outside hole farthest from the door section. (Fig. 7-D)

STEP - 7 ALTERNATE INSTRUCTIONS IF INSTALLING PLASTIC HINGES

Step 7-1: If using plastic hinges follow the instructions above and refer to (FIG. 7-E) for roller placement. Start with the slot for a #3 hinge on the bottom section. Refer to (Fig. 7-F) for hinge placement.

Once the bottom brackets, hinges, and rollers are fastened to the bottom section, stop and proceed to step # 8 on page 8.

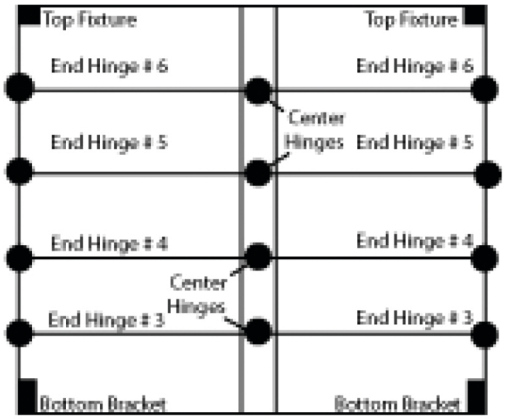

FIG. 7-F

Top of Hinges

Bottom of Hinges

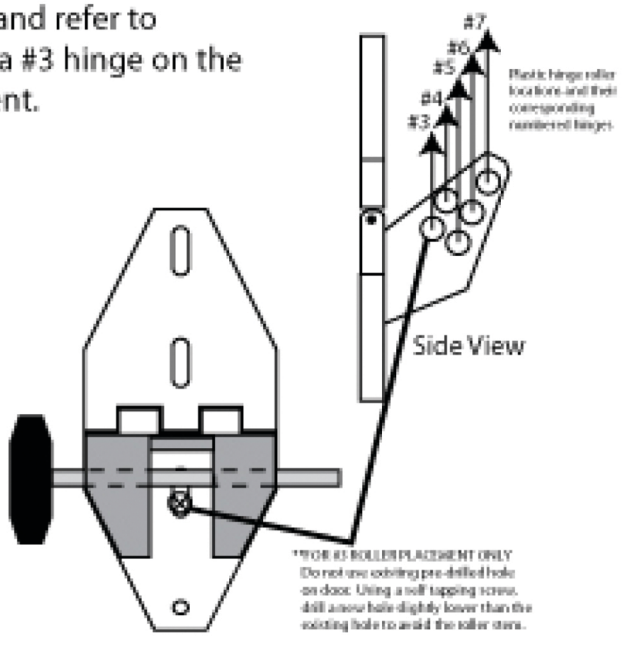

FIG. 7-E (Left Hand End Hinge)

STEP 8 -INSTALLING VERTICAL TRACK

Step 8-1: Place bottom section in the opening. Center the bottom Section with equal overlap on each side. Use a level to make sure the section is level. Use shims if need be to make sure that the door section is level. (Fig. 8-A)

Note: Make sure your cables are behind the rollers before the next step.

Step 8-2: Position vertical track around the rollers of the bottom section. Vertically align the track so there is approximately 3/4" gap between the edge of the section and the edge of the track. (FIG. 8-B)

Rollers will have a small amount of play when track is aligned correctly. Make sure that the vertical track is plumb and level before attaching to the wall on a level floor.

A) Angle mount track for wood jamb: Place vertical track (the straight track with no curve) in position up one side of door. Using 5/16" x 1-1/2" wood lags to hold track to wood. This track must be level. Next install other vertical track using the same method. (FIG. 8-B)

B) Angle mount track for Steel Jambs: Same procedure as wood installation, except angle of track faced in towards door. Weld to jamb.

C) Angle mount track for cement jamb: Same as steel procedure except use 1-7/8" x 3/8" cement anchors to hold track.

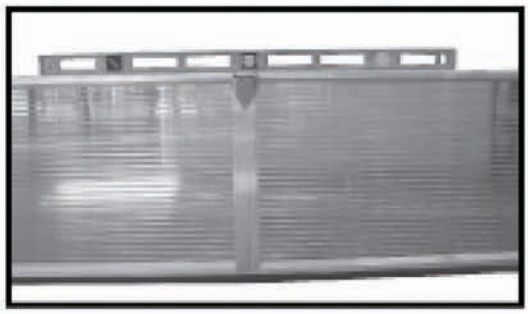

FIG. 8-A

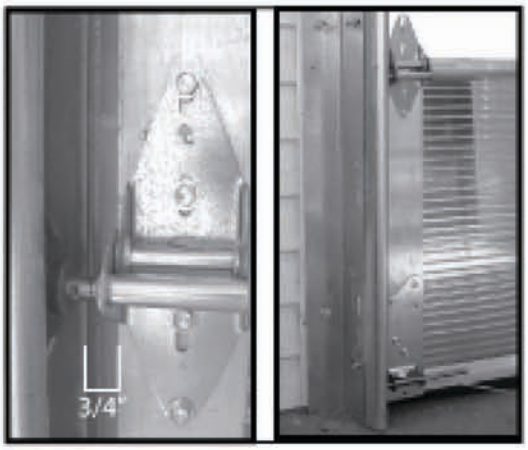

FIG. 8-B

STEP 9 - INSTALLING THE OTHER SECTIONS

Note: Doors are tongue in groove design. The male end of the section faces up and the female end faces down.

Step 9-1: Install # 4 hinges on the next panel on the saw horses. The # 4 hinges go on the end stiles and the # 1 hinge goes on the center stile.

Step 9-2: Take the section with the # 4 hinges and install the rollers in the hole that is furthest from the section (For plastic hinges, refer to the roller placement guide on page 7).

Step 9-3: Lift the section up in the opening and lower down with the rollers going into the vertical track. Lower it down and set it on top of the bottom section. Center the section with the bottom section. (Fig. 9-A & 9-B)

Step 9-4: Continue assembling the sections. Install the end hinges onto the sections in ascending order with the # 1 hinges remaining in the center. Stop when you have one section remaining. This will be your top section.

FIG. 9-A

FIG. 9-B

STEP 10 - INSTALLING VERTICAL TRACK TO HORIZONTAL TRACK

Step 10-1: Using two people, have one person hold the back of the horizontal track and have the other install the horizontal track to the vertical track using two 1/4" track bolts and nuts and one 3/8" x 1" carriage bolt. See (Fig. 10-A)

Note: Use a temporary support on the back of the horizontal track to hold the weight of the door. Horizontal track should be level or slightly pitched up. (Fig. 10-B)

FIG. 10-A (Right Side Assembly)

STEP 11- INSTALLING TOP FIXTURES

Step 11-1: Dis-assemble the top fixtures and attach them to the top section as shown in Fig. 11-A. Install the top section in the opening. Then re-attach the top fixtures with the roller in the fixture. Tighten the bolts so that the top section is in line with the rest of the sections. Be sure that you do not push the section too tight against the wall as the door will bind.

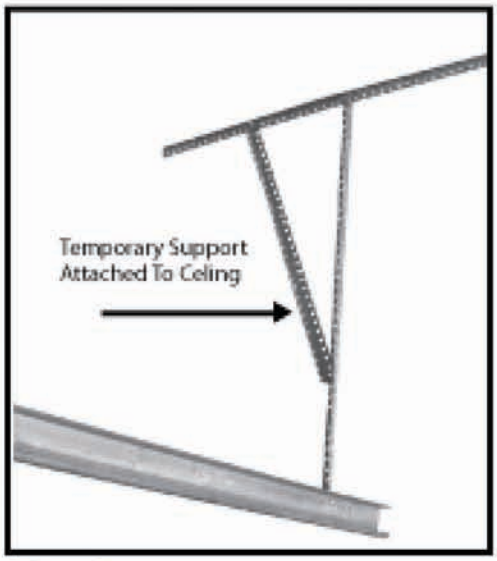

FIG. 10-B

FIG. 11-A

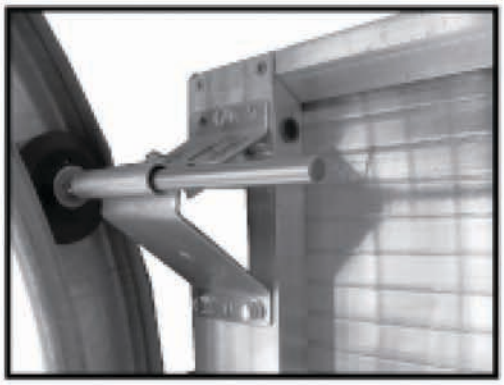

FIG. 11-B

STEP 12 - FASTEN HINGES TO DOOR

Step 12-1: Screw all of the sections together by fastening all of the hinges to the panels using the supplied screws.

STOP

If installing Torsion Springs, see steps 13 through 16
If installing Strapeze Counterbalance System, see steps 17 through 23

STEP 13 - SPRING ASSEMBLY (1 Piece Solid Shaft)
****If installing a 2 piece split shaft, skip to step 15****

TORSION SPRINGS ARE EXTREMELY DANGEROUS. DO NOT PROCEED UNLESS YOU ARE A TRAINED DOOR INSTALLER AND HAVE THE PROPER TOOLS TO INSTALL TORSION SPRINGS. IMPROPER INSTALLATION OF TORSION SPRINGS CAN CAUSE SEVERE BODILY INJURY OR DEATH.

13-1: Slide the freeway bearing onto the shaft and position it in the center of the shaft.

13-2: Slide the left hand spring (Red Cone) onto the left end of the shaft with the Red painted end away from the bearing. (FIG. 13-A)

13-3: Slide the right hand spring (Black Cone) onto the right end of the shaft with the Black painted end away from the bearing. (FIG. 13-A)

13-4: Slide the freeway bearing into the end of either spring. Which spring the freeway bearing goes into will be determined by which direction you put the bearing on the shaft. Either spring is okay. (FIG. 13-B)

13-5: With the left hand spring (RED) to your left and the right hand spring (BLACK) to your right, place the center bearing plate against the spring with the freeway bearing in it as shown. (FIG. 13-C)

13-6: Using the 3/8" bolts and nuts provided, bolt both springs and the bearing plate together as shown in FIG. 13-D. Do not tighten the nuts yet.

13-7: Slide the right hand cable drum (BLACK) onto the right end of the shaft making sure the set screws on the drum are towards the center of the shaft. Next, place a white PVC spacer on the right end of the shaft. (FIG. 13-E)

13-8: Slide the right hand end bearing plate onto the right end of the shaft as shown. (FIG 13-F)

13-9: Repeat steps 13-7 and 13-8 for the left side of the shaft.

****ONCE YOU HAVE PERFORMED ALL THE ABOVE STEPS CONTINUE WITH STEP 14****

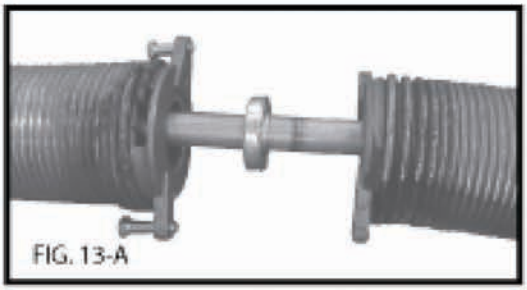
FIG. 13-A

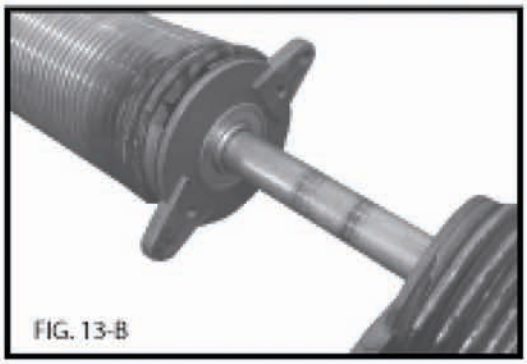
FIG. 13-B

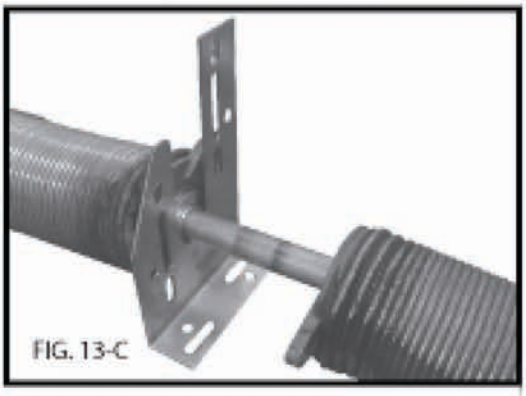
FIG. 13-C

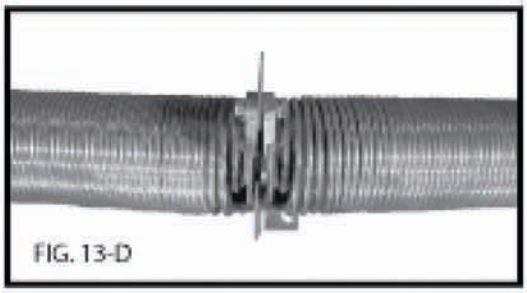
FIG. 13-D

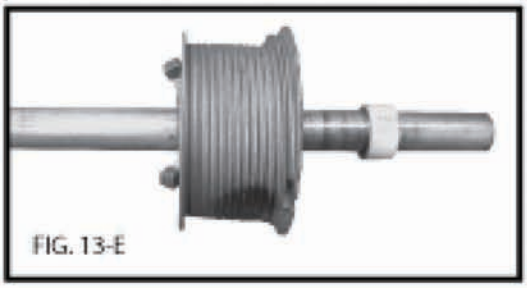
FIG. 13-E

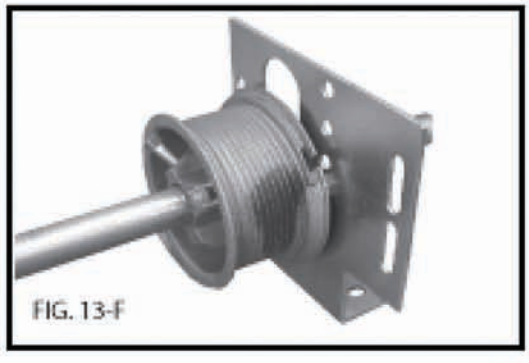
FIG. 13-F

STEP 14 - INSTALLING 1 PIECE SOLID SHAFT SPRING ASSEMBLY
**IF INSTALLING 2 PIECE SOLID SPLIT SHAFT SEE STEPS 15 & 16

14-1: Using two people, lift entire shaft assembly on top of horizontal tracks as shown in FIG. 14-A.

14-A

14-2: Attach the end bearing plates to the horizontal track using the 3/8" carriage bolts and nuts provided. (FIG. 14-B)

14-3: Screw the end bearing plates to the wall using the wood lags provided. (If mounting to concrete, use concrete anchors (not provided.) (FIG. 14-B)

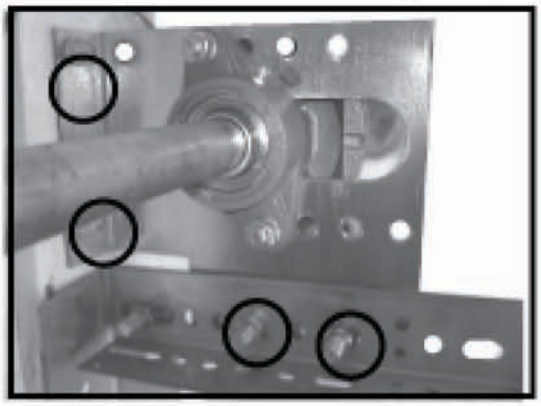

14-B

14-4: Level the shaft and attach the center bearing plate to the wall using the wood lags provided. (if mounting to concrete, use concrete anchors) See Fig. 14-C.
Next, make sure the shaft is the same distance from the wall along the entire length. Adjust the bearing on the center plate as needed to achieve this and tighten the 3/8" bolts on the spring to the center bearing plate. (FIG's. 14-C)

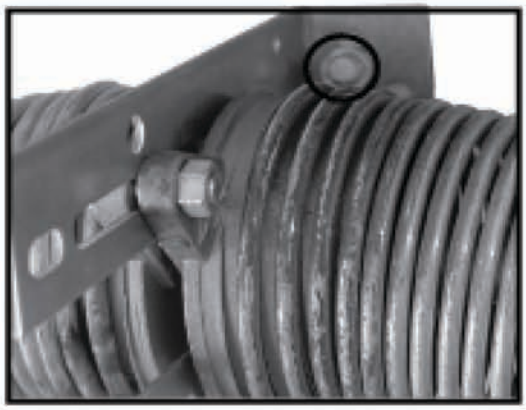

14-C

14-5: Pull the cable attached to the left hand bottom bracket up to the shaft by running it behind each roller stem. (FIG. 14-D)

14-6: Run the cable on the back side of the left hand (RED) cable drum and hook the cable bead into the slot on the drum. (FIG. 14-E)

14-7: Rotate the cable drum until the cable is tight, and tighten the set screws on the cable drum.

14-D

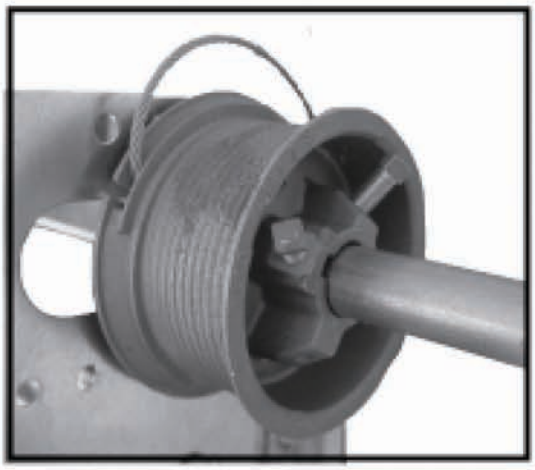

14-E

STEP 14 CONTINUED ON NEXT PAGE

STEP 14 - INSTALLING 1 PIECE SOLID SHAFT SPRING ASSEMBLY CONTINUED
**IF INSTALLING 2 PIECE SOLID SPLIT SHAFT SEE STEPS 15 & 16.

14-8: While holding the drum so the cable is tight, place a vice grip on the shaft and let it rest against the wall to keep the cable tight. Be sure the vice grip is securely locked. (FIG. 14-F)

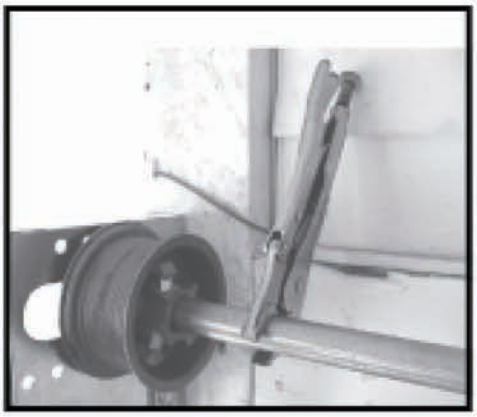

14-F

14-9: Repeat steps 14-5 through 14-7 for the right hand cable and drum.

14-10: Find the spring tag attached to one of the springs. This tag will tell you how many complete turns to wind each spring.

14-11: Attach a vice grip to the vertical track just above one of the rollers to prevent the door from moving after you wind the springs. (FIG. 14-G)

14-G

WINDING SPRINGS IS EXTREMELY DANGEROUS AND CAN CAUSE SEVERE BODILY INJURY OR DEATH AND SHOULD ONLY BE PEFORMED BY A TRAINED DOOR INSTALLER WITH THE APPROPRIATE TOOLS.

14-12: Using two winding bars, wind the springs one at a time according to the following steps.

1. Place the first winding bar in the winding cone of the spring. (FIG. 14-H)
2. Pull the bar away from the wall and lift towards the ceiling. **See diagram (14-I) for winding direction**
3. While holding the first bar up, place the second bar in the winding hub and let it rest against the wall.
4. Repeat the previous 3 steps, winding the spring 1/4 turn at a time until you reach the # of turns specified on the spring tag.
5. Once the correct # of turns is reached, tighten the set screws on the spring and remove the winding bar.

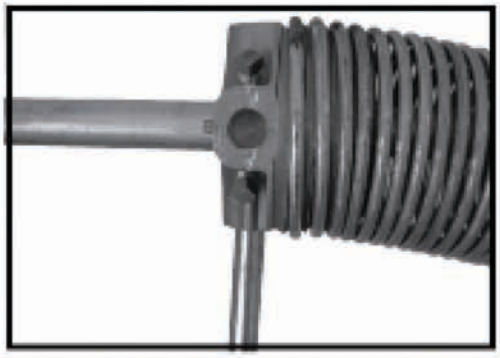

14-H

14-13: Repeat step 14-12 for the remaing spring.

14-14: Once both springs are wound and you have tightened the set screws on both springs, remove the vice grip from the shaft.

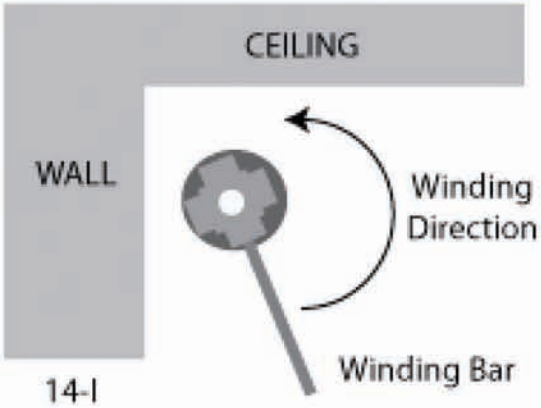

14-I

**LEAVE VICE GRIP ON THE VERTICAL TRACK AND SKIP TO STEP 23 ON PAGE 23 **

STEP 15 - SPRING ASSEMBLY (2 Piece Solid Split Shaft)
If installing a 1 piece solid shaft, go back to step 13

TORSION SPRINGS ARE EXTREMELY DANGEROUS. DO NOT PROCEED UNLESS YOU ARE A TRAINED DOOR INSTALLER AND HAVE THE PROPER TOOLS TO INSTALL TORSION SPRINGS. IMPROPER INSTALLATION OF TORSION SPRINGS CAN CAUSE SEVERE BODILY INJURY OR DEATH.

We will assemble the right side of the shaft first then the left.

15-1: Slide a freeway bearing onto one of the shafts and position it approx. 6" from the left end. *Note the flange on the bearing should be facing left. (FIG. 15-A)

15-2: Slide the right hand spring (Black Cone) onto the right end of the shaft with the Black painted end away from the bearing. (FIG. 15-B)

15-3: Slide the freeway bearing into the end of the spring. Position the right hand center bearing plate against the spring and bearing. (FIG. 15-C)

15-4: Using the 3/8" bolts and nuts provided, bolt the spring and the bearing plate together as shown in FIG. 15-C. Do not tighten the nuts yet.

15-5: Slide the right hand cable drum (BLACK) onto the right end of the shaft making sure the set screws on the drum are towards the spring. Next, place a white PVC spacer on the right end of the shaft. (FIG. 15-D)

15-6: Slide the right hand end bearing plate onto the right end of the shaft as shown. (FIG 15-E)

15-7: Separate the shaft coupler into two halves and set the bolts and nuts aside for now.

15-8: Place one 1/4" key into the key way on the left end of the shaft. The end of the key should be flush with the end of the shaft. (FIG. 15-F)

15-9: Slide one half of the coupler onto the shaft and over the key. Position the coupler half so it is flush with the end of the shaft. (FIG. 15-G)

15-10: Tighten the set screws on the coupler to hold it in place.

15-11: Repeat steps 15-1 through 15-10 for the left side of the shaft.

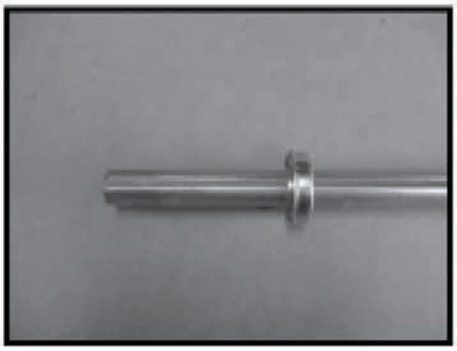

FIG. 15-A

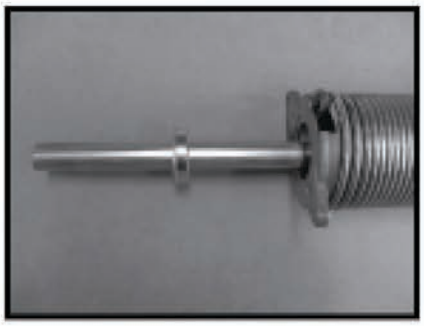

FIG. 15-B

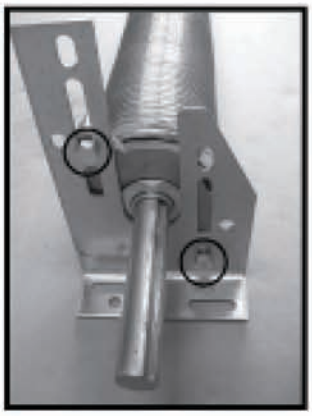

FIG. 15-C

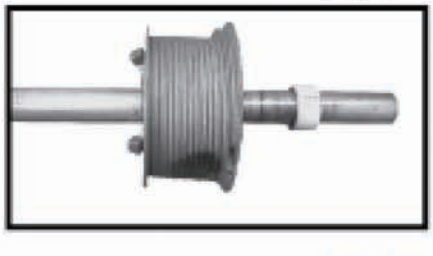

FIG. 15-D

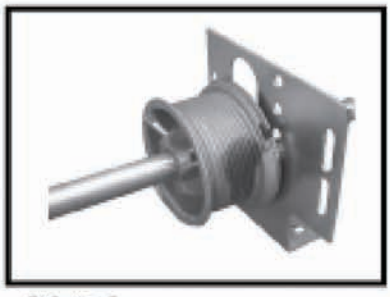

FIG. 15-E

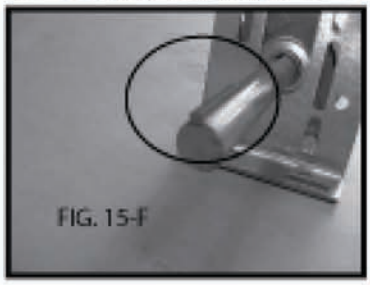

FIG. 15-F

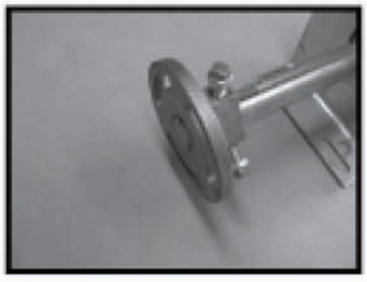

FIG. 15-G

ONCE YOU HAVE PERFORMED ALL THE ABOVE STEPS PROCEED TO STEP 16

STEP 16 - INSTALLING 2 PIECE SOLID SPLIT SHAFT SPRING ASSEMBLY CONTINUED

16-1: Using two people, lift one of the shaftline halves onto the horizontal track. (FIG. 16-A)

16-A

16-2: Attach the end bearing plate to the horizontal track using the 3/8" carriage bolts and nuts provided. (FIG. 16-B)

16-3: Screw the end bearing plates to the wall using the wood lags provided. (If mounting to concrete, use concrete anchors (not provided.) (FIG. 16-B)

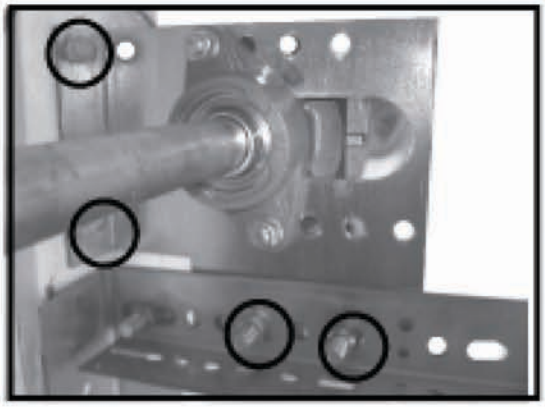

16-B

16-4: Level the shaft and attach the center bearing plate to the wall using the wood lags provided. (If mounting to concrete, use concrete anchors (not provided.) (FIG's. 16-C)

16-5: Slide shaft so that the coupler is directly in the center of the door.

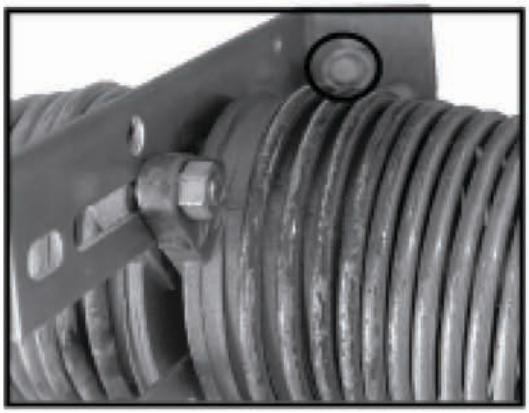

16-C

16-6: Lift remaining half of the shaftline onto horizontal track.

16-7: Bolt end bearing plate to horizontal track and lag to wall. (FIG. 16-B)

16-8: Bolt the two halves of the coupler together using the bolts that came with the coupler. (FIG. 16-D)

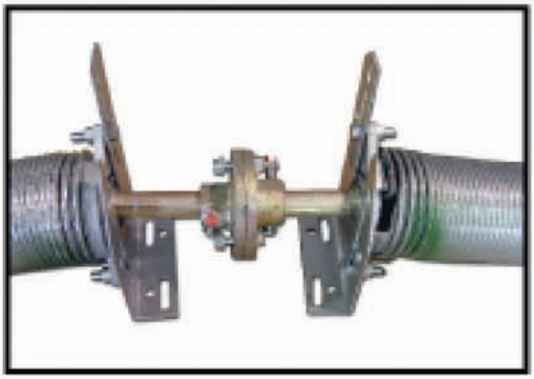

16-D

16-9: Attach the second center bearing plate to the wall using the wood lags provided.

16-10: Check that the shaft is the same distance from the wall throughout the entire length. Tighten bolts that attach the bearing plates to the springs.

****STEP 16 CONTINUED ON NEXT PAGE****

STEP 16 - INSTALLING 2 PIECE SOLID SPLIT SHAFT SPRING ASSEMBLY CONTINUED

16-11: Pull the cable attached to the left hand bottom bracket up to the shaft by running it behind each roller stem. (FIG. 16-E)

16-E

16-12: Run the cable on the back side of the left hand (RED) cable drum and hook the cable bead into the slot on the drum. (FIG. 16-F)

16-13: Rotate the cable drum until the cable is tight, and tighten the set screws on the cable drum.

16-14: While holding the drum so the cable is tight, place a vice grip on the shaft and let it rest against the wall to keep the cable tight. (FIG. 16-G)

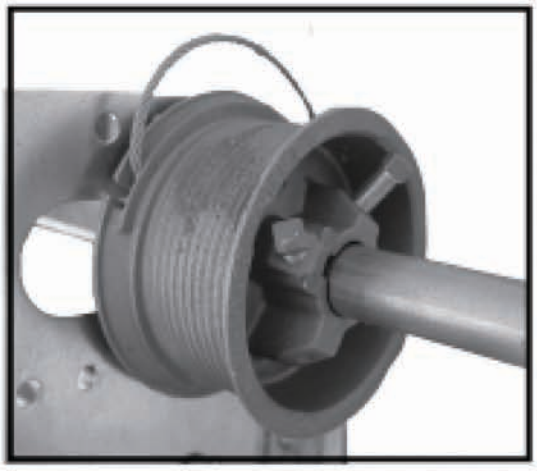

16-F

16-15: Repeat steps 16-11 through 16-13 for the right hand cable and drum.

16-16: Find the spring tag attached to one of the springs. This tag will tell you how many complete turns to wind each spring.

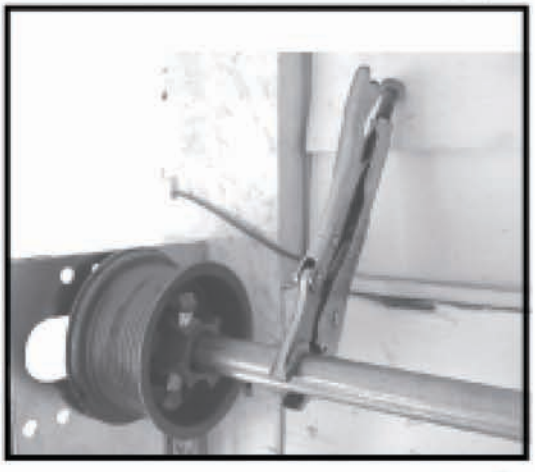

16-G

STEP 16 CONTINUED ON NEXT PAGE

STEP 16 - INSTALLING 2 PIECE SOLID SPLIT SHAFT SPRING ASSEMBLY CONTINUED

16-17: Attach a vice grip to the vertical track just above one of the rollers to prevent the door from moving while you wind the springs. (FIG. 16-H)

16-H

WINDING SPRINGS IS EXTREMELY DANGEROUS AND CAN CAUSE SEVERE BODILY INJURY OR DEATH AND SHOULD ONLY BE PEFORMED BY A TRAINED DOOR INSTALLER WITH THE APPROPRIATE TOOLS.

16-18: Using two winding bars, wind the springs one at a time according to the following steps.

1. Place the first winding bar in the winding cone of the spring. (FIG. 16-I)
2. Pull the bar away from the wall and lift towards the ceiling. **See FIG. 16-J below for winding direction**
3. While holding the first bar up, place the second bar in the winding hub and let it rest against the wall.
4. Repeat the previous 3 steps, winding the spring 1/4 turn at a time until you reach the # of turns specified on the spring tag.
5. Once the correct # of turns is reached, tighten the set screws on the spring and remove the winding bar.

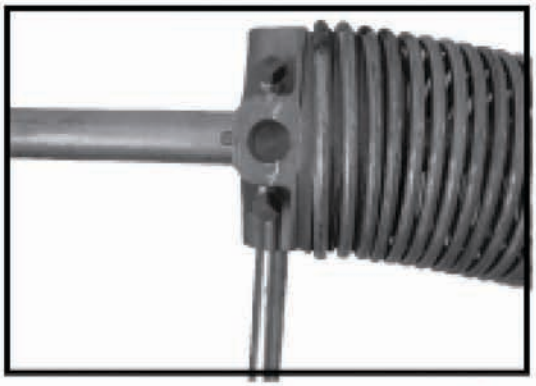

16-I

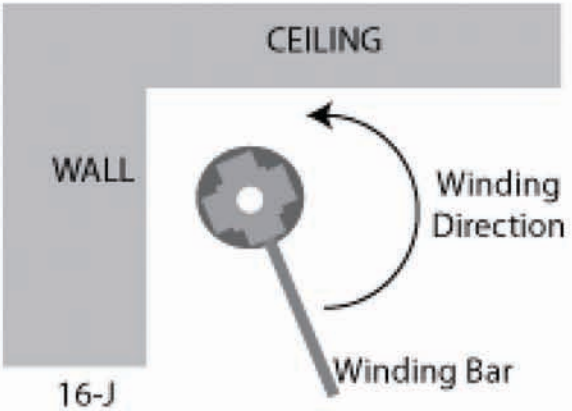

16-J

16-19: Repeat step **16-18** for the remaing spring.

16-20: Once both springs are wound and you have tightened the set screws on both springs, remove the vice grip from the shaft.

**** LEAVE THE VICE GRIP ON THE VERTICAL TRACK AND SKIP TO STEP 24 ON PAGE 23**

STEP 17 - ASSEMBLYING STRAPEZE SHAFTLINE

*****NOTE** All references to Left and Right are viewed from the inside of the bay looking out.***

17-1: Slide one of the center adjustable bearing plates onto the shaft and position it roughly in the center of the shaft. (FIG. 17-A)

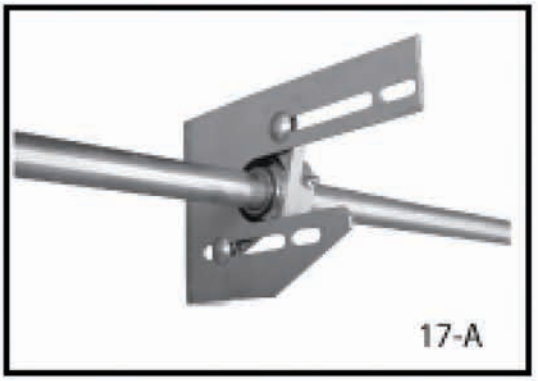
17-A

17-2: Slide the right hand (Black) cable drum onto the right end of the shaft with the set screws towards the center. (FIG. 17-B)

17-3: Slide one 1-1/2" white PVC spacer onto the right end of the shaft. (FIG. 17-B)

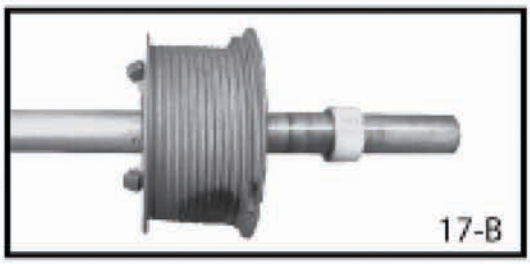
17-B

17-4: Slide the right hand end bearing plate onto the right end of the shaft. (FIG. 17-C)

17-5: Repeat steps 17-2 through 17-4 for the left side of the shaft.

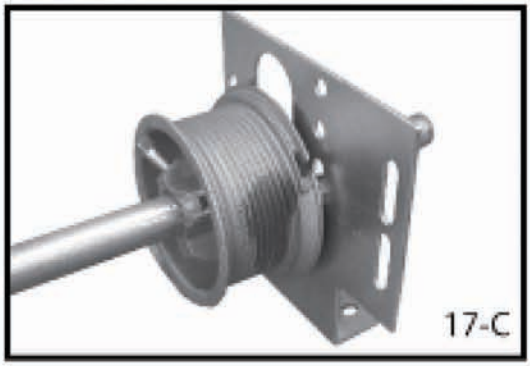
17-C

17-6: With two people lift entire shaftline assembly and place on top of the horizontal track against the wall. (FIG. 17-D)

17-7: Fasten end bearing plates to the horizontal angle using two 3/8" x 1" carriage bolts per plate. (FIG. 17-E)

17-8: Fasten end bearing plates to the wall using two 1-7/8" wood lags per plate, or concrete anchors if attaching to concrete (FIG. 17-E)

17-D

17-9: Slide the center bearing plate to the center of the shaft so that it lines up with the center of the door. Level the shaft and fasten the center bearing plate to the wall using two 1-7/8" wood lags. or concrete anchors if attaching to concrete. (FIG. 17-F)

17-10: Make sure the shaft is the same distance from the wall along the entire length. Adjust the bearing on the center plate as necessary to achieve this.

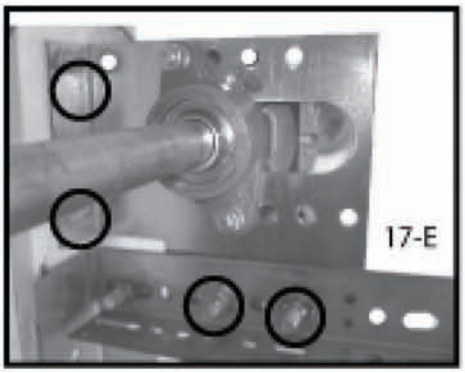
17-E

17-11: Determine on what side of the door you will be installing the counterbalance system. Keep in mind you should have 12" min. of clear space from the edge of the door opening.

17-12: Slide the shaft so that you leave 6" of shaft exposed outside the bearing on the side opposite to where you will install the counterbalance system. This will leave approx. 12" - 18" of shaft exposed on the counterbalance side.

17-F

CONTINUE WITH STEP 18

STEP 18 - INSTALLING THE STRAPEZE SYSTEM CONTINUED

18-1: Slide one of the strapeze winding hubs on the shaft with the set screws towards the end bearing plate. Position the winding hub approximately 4-1/2" from the end bearing plate. (FIG. 18-A)

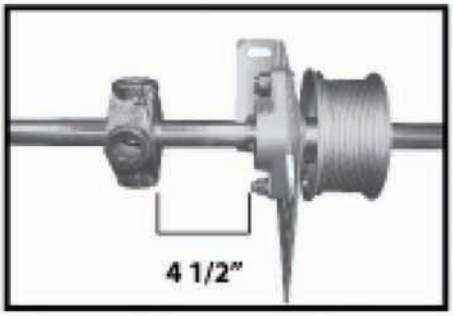

FIG. 18-A

18-2: Slide one of the black plastic guide disks on the shaft with the smooth side facing away from the winding hub. (FIG. 18-B)

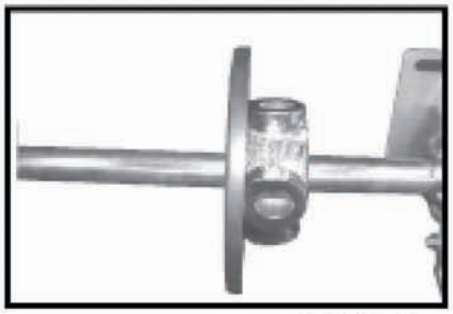
FIG. 18-B

18-3: Slide the black start spacer onto the shaft with the thicker portion on top of the shaft. (FIG. 18-C & 18E)

18-4: While standing on a ladder, remove the strap from the bag and unroll the strap towards the floor. When the strap is completely unwound you will have a single strap in your hand with two separate loops hanging towards the floor. (FIG. 18-D)

18-5: Hang the single part of the strap on the black start spacer. (FIG. 18-E)

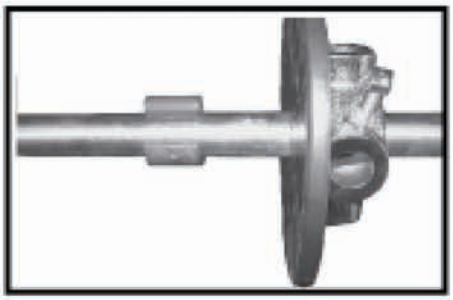
FIG. 18-C

FIG. 18-D

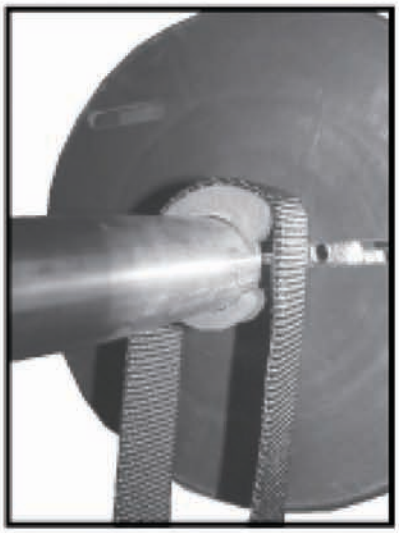
FIG. 18-E

18-6: Adjust the strap according to the strap label that came with the strap. SEE FOLLOWING EXAMPLE & FIG's 18-F & 18-G

STRAP TAG EXAMPLE

STRAP#: AW-B-115-013-037
FIRST START: 013
SECOND START: 037
COLOR: BLACK

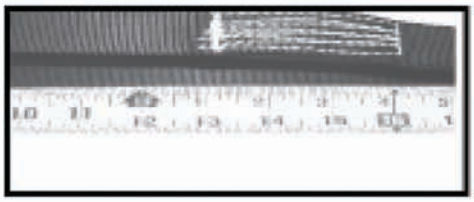
FIG. 18-G

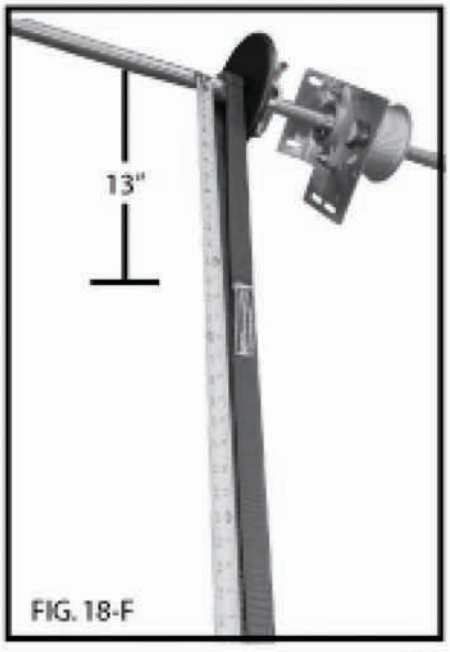

FIG. 18-F

1: Adjust the strap so that the white stiching on the side of the strap away from the wall matches the first start. (In example this is 13")
2: Once the first start is set, the white stiching on the wall side of the strap will match the second start. (In example this is 37")

STEP 18 - INSTALLING THE STRAPEZE SYSTEM CONTINUED

18-7: Slide the remaining guide disk on the shaft with the smooth side towards the strap. Slide remaining winding hub on the shaft with the set screws away from the guide disk. (FIG. 18-H)

18-8: Install strap 1/4" strap pin through the pre-drilled hole in the outer winding hub. Continue pushing the pin through the strap assembly so it runs through the slots in both winding hubs, through both guide disks and **over** the strap. (FIG. 18-I)

18-9: Once the strap pin has been installed, the strapeze assembly will resemble FIG. 18-J.

18-10: Tighten all set screws on the winding hubs. (3 ea., 6 total)

18-11: Add a center bearing plate to the end of the shaft outside of the strapeze assembly. Fasten to wall to help support the weight stack. (See Fig 18-K)

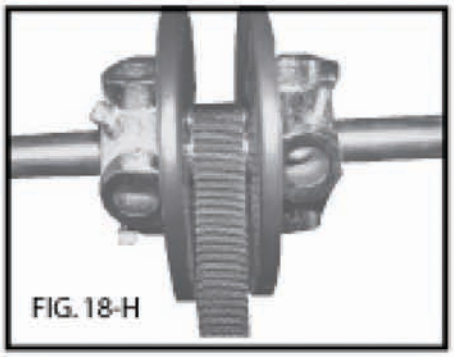
FIG. 18-H

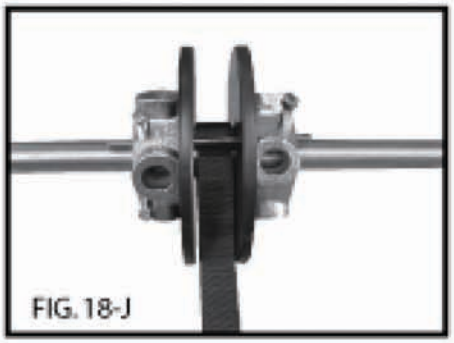
FIG. 18-J

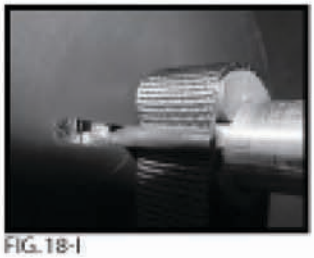
FIG. 18-I

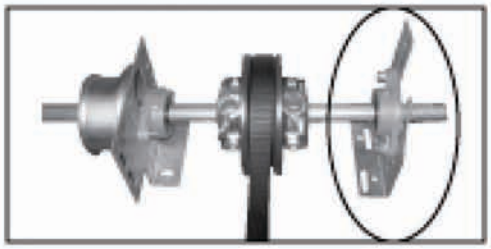
Fig. 18-K

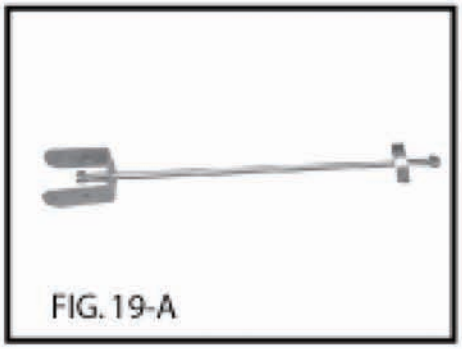
FIG. 19-A

STEP 19 - ASSEMBLE WEIGHT BRACKET & ROD

19-1: Thread one 3/8" lock nut onto the threaded rod so that the end of the rod is flush with the nut.

19-2: Slide all 1-1/2" washers provided onto the rod.

19-3: Slide strap bracket onto the rod so that the flat bottom portion of the bracket is towards the washers and nut.

19-4: Thread a 3/8" lock nut onto the opposite end of the rod. FINAL ASSEMBLY WILL RESEMBLE FIG. 19-A

19-5: Place a strap spool on each bottom loop as shown. (FIG. 19-B)

19-6: Insert the 3/8"x3" bolts through the holes in the strap bracket and through each spool. (FIG. 19-C)

19-7: Thread a 3/8" lock nut on each bolt and tighten only until the end of the bolt is flush with the nut.

**Nuts must not be overtightened. The bolts must have enough play to allow the spools to spin.

FIG. 19-B

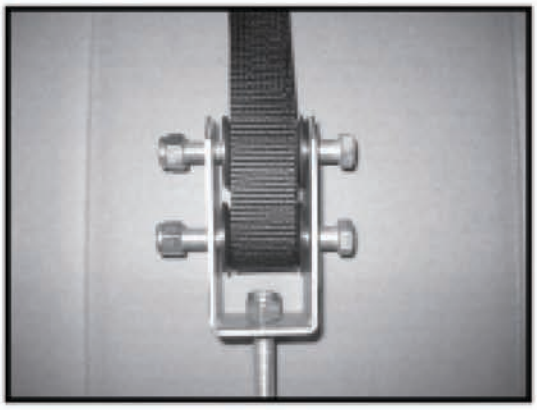
FIG. 19-C

STEP 20 - STACKING THE WEIGHTS

20-1: Slide the washers on the strap rod to the top leaving two washers at the bottom.

20-2: Place one of the larger 18.9lb weights on the rod so it rests on the bottom two washers.

20-3: Lower one of the washers onto the first weight and stack another 18.9lb weight on top of the first one. **Rotate the second weight 180 deg. so the gaps in the weights are facing opposite directions.

20-4: Continue stacking the large weights in the same way as described above. Make sure to place one washer between each weight and rotate every other weight 180 deg. (FIG. 20-A)

FIG. 20-A

20-5: Finish by stacking any small 5lb weights on top of the larger weights, still placing a washer in between each weight.

STEP 21 - WINDING THE WEIGHTS

WINDING COUNTERWEIGHTS IS EXTREMELY DANGEROUS AND CAN CAUSE SEVERE BODILY INJURY OR DEATH AND SHOULD ONLY BE PEFORMED BY A TRAINED DOOR INSTALLER WITHTHE APPROPRIATE TOOLS.

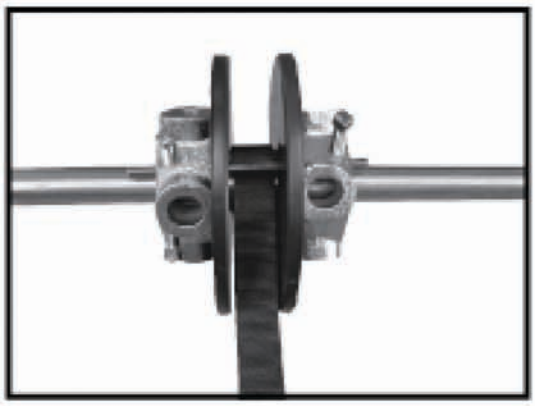

FIG. 21-A

21-1: Insert 5/8" winding bar into either winding hub.

21-2: While facing the wall, pull the bar towards you and lift towards the ceiling. This is the direction the weights need to be wound.

21-3: While holding the first winding bar up, insert the other winding bar into the winding hub and let it rest against the wall.

21-4: Repeat steps 21-2 and 21-3 winding the weights 1/4 turn at a time until the strap bracket is approximately one inch from the black guide disks. (FIG. 21-B)

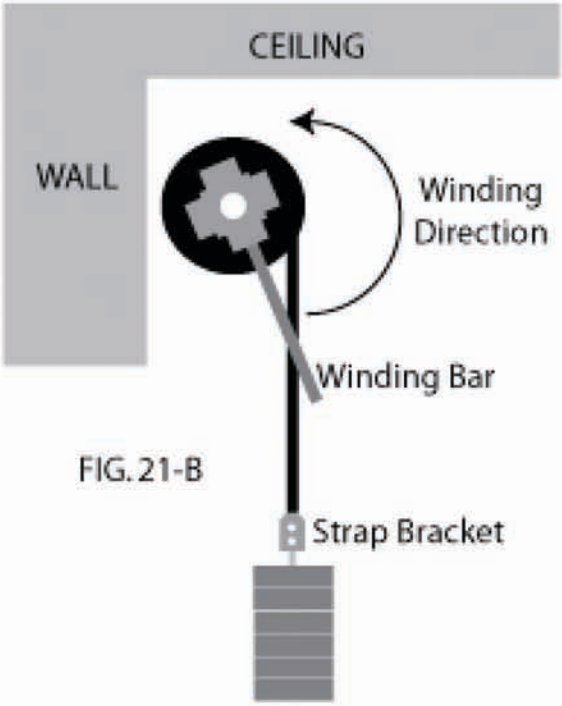

FIG. 21-B

IMPORTANT

Weights must be wound to their full height at approximately one inch from the guide disks in order for the door to balance correctly.

21-5: Once the weights are wound. Insert one winding bar into the winding hub and let the bar rest against the wall to prevent the weights from falling.

STEP 22- SETTING CABLES AND CABLE DRUMS

WARNING--THE WEIGHT STACK IS ONLY HELD BY THE WINDING BAR AGAINST THE WALL. USE CAUTION IN THE FOLLOWING STEPS TO ENSURE THE WINDING BAR DOES NOT RELEASE FROM THE WINDING HUB WHICH COULD RESULT IN THE WEIGHTS FREE FALLING.

22-1: Pull the cable attached to the left hand bottom bracket up to the shaft by running it behind each roller stem. (FIG. 22-A)

22-2: Run the cable on the back side of the left hand (RED) cable drum and hook the cable bead into the slot on the drum. (FIG. 22-B)

22-3: Rotate the cable drum until the cable is tight, and tighten the set screws on the cable drum.

22-4: With the cable tight, attach a vice grip to the shaft so the handle of the vice grip rests against the wall. This will keep the cable tight while you set the other cable drum. (FIG. 22-C)

22-5: Repeat steps 22-1 though 22-3 for the right hand cable and cable drum.

22-6: Double check that all set screws on the cable drums are tight and both cables have approximately the same tension.

22-7: Remove the vice grip from the shaft and attach it to either of the vertical tracks just above one roller. This will prevent the door from moving when you release the strap winding bar. (FIG. 22-D)

USE CAUTION ON STEP 22-8 AS THE DOOR IS NOW UNDER TENSION.

22-8: Once you have attached a vice grip to the vertical track, remove the winding bar from the strapeze assembly by inserting the other bar into the winding hub and lifting up slightly. (FIG. 22-E)

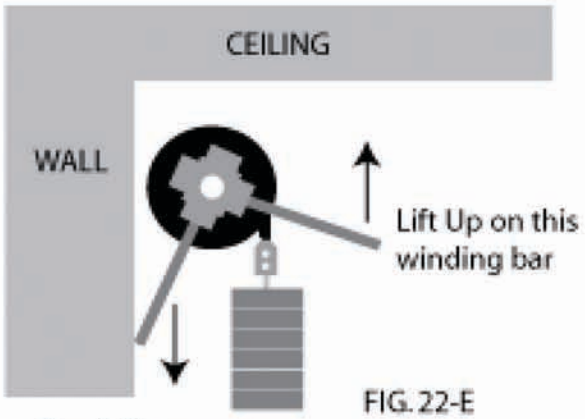

FIG. 22-E

FIG. 22-A

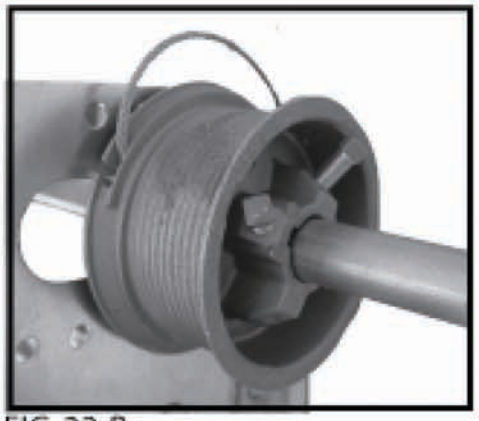

FIG. 22-B

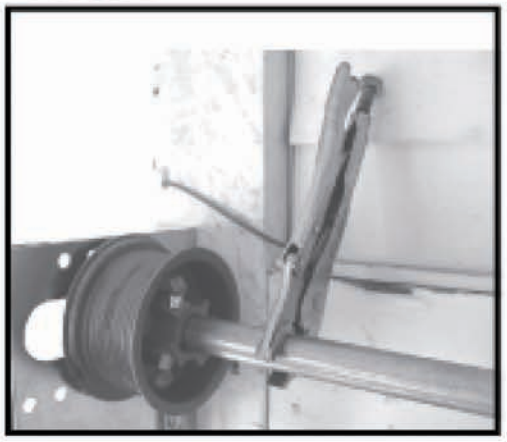

FIG. 22-C

FIG. 22-D

STEP 23 - INSTALLING GUIDE TUBE

23-1: Push PVC guide tube onto the weight stack from underneath. You will need to pull the weights away from the wall slightly while pushing the tube up and over the weights. (FIG. 23-A)

BE SURE TO USE TWO PEOPLE TO SLIDE THE GUIDE TUBE ONTO THE WEIGHT STACK. ONE PERSON SHOULD SUPPORT THE WEIGHTS WHILE THE OTHER HANDLES THE TUBE.

23-2: Mount the guide tube wall bracket to the wall in the center of the guide tube. Make sure the bracket is in line with the guide tube.(FIG 23-B, 23-C)

23-3: Attach one of the guide tube brackets to the wall bracket using the 1/4" bolts and nuts provided. (FIG 23-B, 23-C)

23-4: Position the remaining guide tube bracket around the tube and attach it to the other bracket using the 1/4" bolts and nuts provided. (FIG 23-B, 23-C)

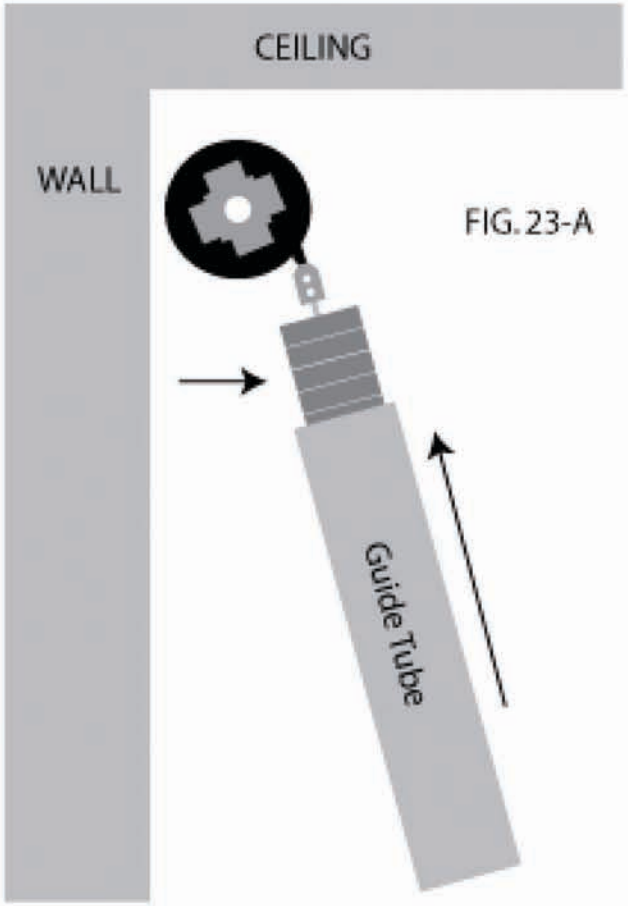

FIG. 23-A

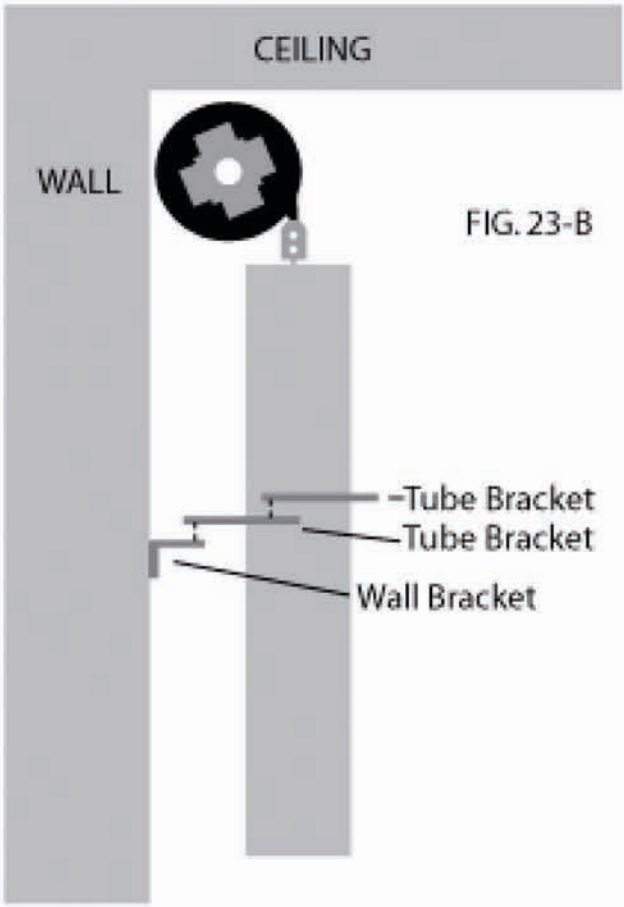

FIG. 23-B

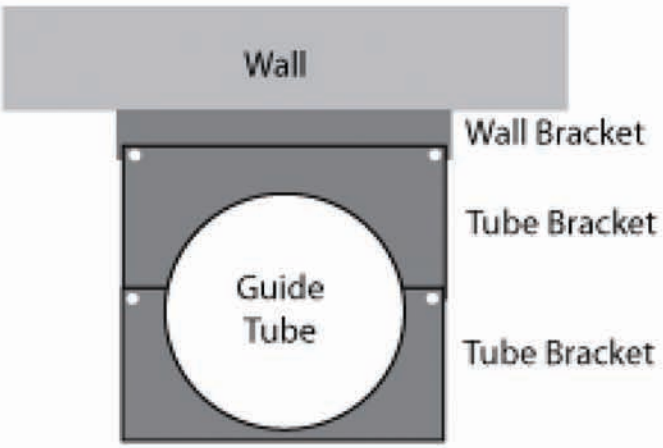

FIG. 23-C

STEP 24 -INSTALL TRACK BACK HANGS

24-1: Remove vice grip from the vertical track.

24-2: Raise door approximately 4' off the ground.

****CAUTION** Do not raise the door past 4' as the horizontal tracks are not supported from the ceiling yet**

24-3: Place vice grip on vertical track to keep door at 4' off the ground.

24-4: Position horizontal tracks so that both tracks run parallel to the door sections. (FIG. 24-A)

24-5: Use punched angle to support each horizontal track from the ceiling as shown. (FIG. 24-B)

NOTE
Horizontal tracks should be level or slightly pitched up when supported from ceiling.

ALWAYS PLACE A BOLT THROUGH THE BACK OF THE TRACK OR USE SPRING BUMPERS ON THE TRACK TO ENSURE THE DOOR CAN NEVER ROLL OFF THE BACK OF THE TRACKS ONCE THE DOOR IS IN OPERATION.

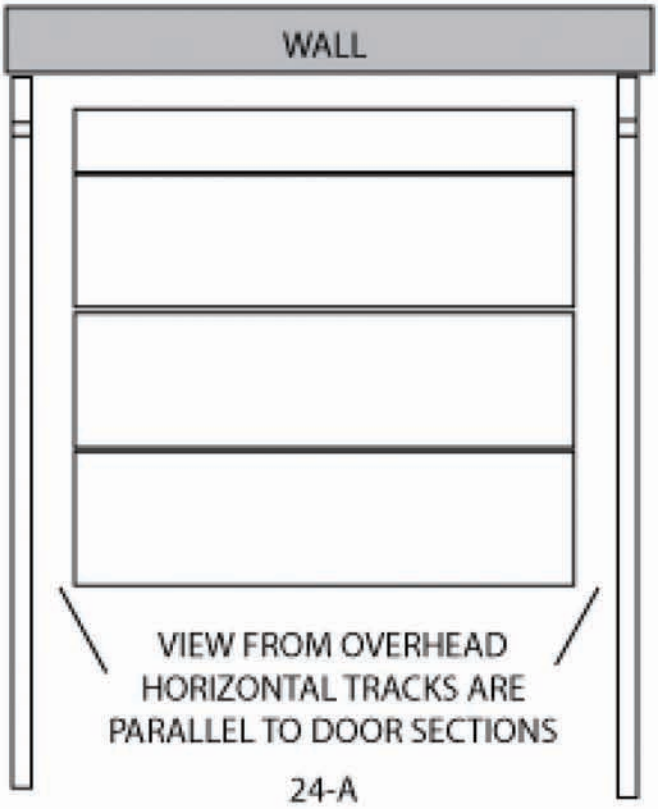

24-A

24-B

STEP 25 - TESTING DOOR OPERATION

25-1: Remove vice grip from vertical track and close door.

25-2: Run the door open and closed to make sure no components are binding.

25-3: To check the balance of the door, raise the door to approximately chest height. The door should balance at this position and not creep upwards or downwards.