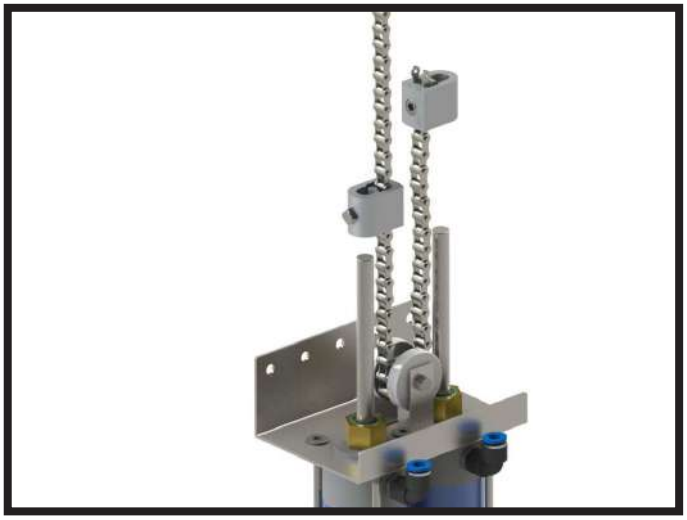

AIRLIFT

Standard Air Opener Installation Guide

Airlift Doors, Inc.
1-888-368-4403
www.AirliftDoors.com

****CAUTION****

Please read through these instructions before beginning installation of the air opener. Only trained professional installers should attempt installation of the Standard Air Opener from Airlift Doors, Inc. Improper installation of this product could result in personal injury or death.

Some steps in the installation process require lifting components overhead while standing on a ladder or other lifting equipment. A minimum of 2 people must be used along with the proper lifting and safety equipment.

Always inspect your tools and equipment to be sure all are in proper working condition before beginning the installation.

All electrical connections for the opener controls must be installed by a certified electrician.

All compressed air connections must be installed by a certified plumber.

All components and the size of the Standard Air Opener have been engineered according to measurements given to Airlift Doors, Inc. at the time of the order. No modifications must be made to any portion of the air opener, controls, or included components without first consulting with a factory representative. Failure to do so may alter the operation of the door and may create dangerous scenarios upon installation or normal operation that could result in personal injury or death.

Any modifications to the product without factory approval will void all factory warranties.

STEP 1 - PREPARE DOOR

1-1: Close the overhead door and lock the door in the closed position by using the door slide lock or by placing a vice grips on the vertical door track to prevent the door from opening.

STEP 2 - ASSEMBLE OPENER

2-1: Unpack the air opener, chain, and opener hardware baggie containing the aluminum collars, chain sprocket, 1/4"x1/4" key, shaft lock collar, and miscellaneous bolts and nuts.

2-2: Unroll the chain making sure there are no twists and slide one aluminum collar on the non-turnbuckle end as shown below. Please note the direction the collar is facing. This is critical. (FIG. 2A)

FIG. 2A

2-3: Slide the collar approximately 18-24" up the chain. Insert the end of the chain under the white chain guide roller on top of the air opener and pull the chain through. (FIG. 2B)

FIG. 2B

2-4: Pull approximately 12" of chain through the chain guide roller. Slide the second aluminum collar onto the end of the chain. Be sure the large allen/socket set screws are facing each other and the small square head bolts on each collar are facing away from each other. (FIG. 2C)

FIG. 2C

STEP 2 - ASSEMBLE OPENER cont.....

2-5: Disassemble the master chain link on non-turnbuckle end of the chain. (FIG. 2D)

FIG. 2D

2-6: Insert the pin of the master link through the hole at the end of the turnbuckle bolt. Reassemble the master chain link. (FIG's 2E, 2F, 2G)

FIG. 2E

FIG. 2F

FIG. 2G

STEP 3 - MOUNT OPENER

3-1: Slide the sprocket as shown below. Position the sprocket so the teeth are approximately 2-3/4" from the shaft bearing. Insert the 1/4" key into the shaft/collar keyway. Tighten the sprocket set screw. (FIG. 3A)

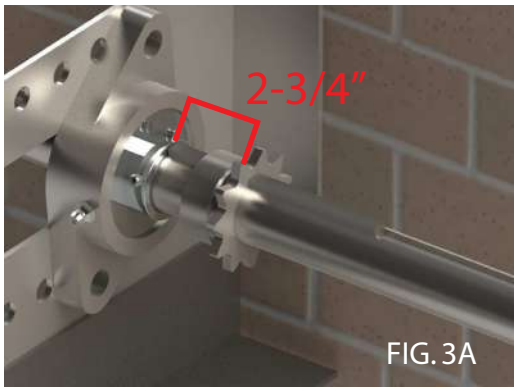

FIG. 3A

3-2: Stand the opener upright so the mounting brackets are against the vertical track angle. (FIG. 3B)

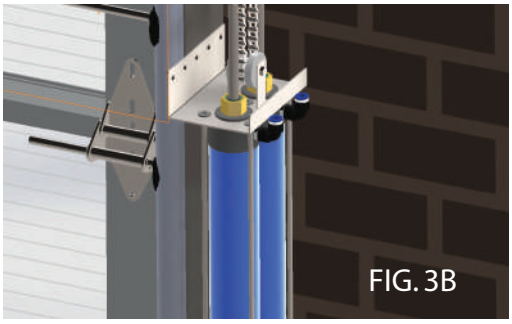

FIG. 3B

STEP 3 - MOUNT OPENER cont.....

3-3: Position the chain turnbuckle approximately 1-3" above the piston rod that is closest to the wall. (FIG. 3C)

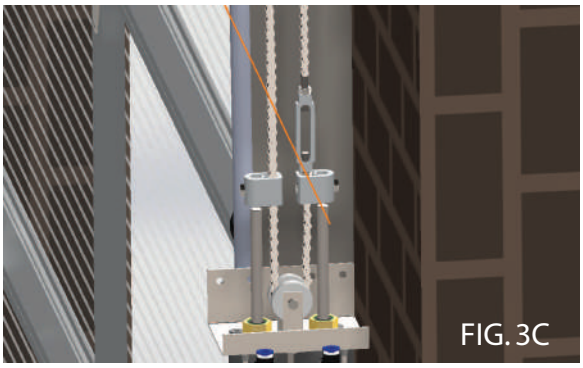
FIG. 3C

3-4: Lift opener and set chain on sprocket making the sure the chain links sit properly on the sprocket teeth. The opener will be hanging from the shaft at this point. (FIG. 3D & 3E)


FIG. 3D

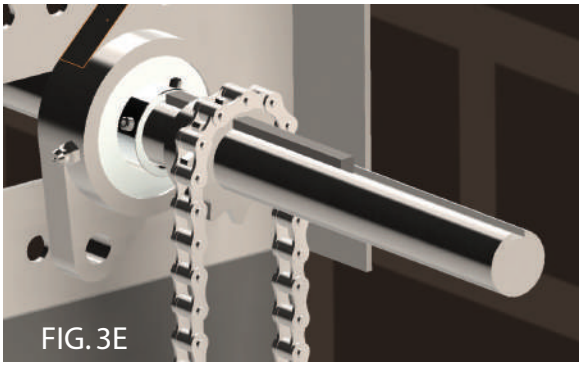
FIG. 3E

3-5: Hold the air opener flush against the track angle and drill (or mark the hole first then drill) a hole through the track angle and vertical track using one of the holes in the mounting bracket as a guide. Attach the mounting bracket to the vertical track using a 1/4" pan head bolt and flange nut found in the hardware bag. Repeat this step for the bottom mounting bracket. (FIG's. 3F & 3G)

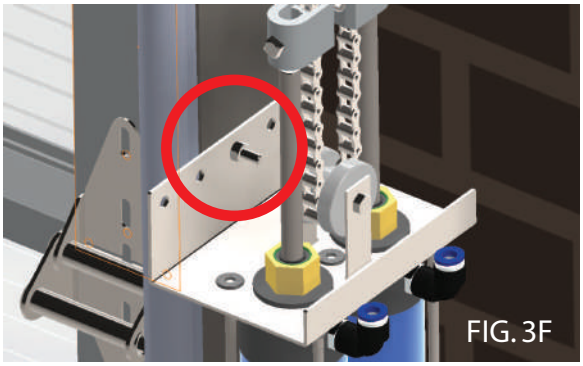
FIG. 3F

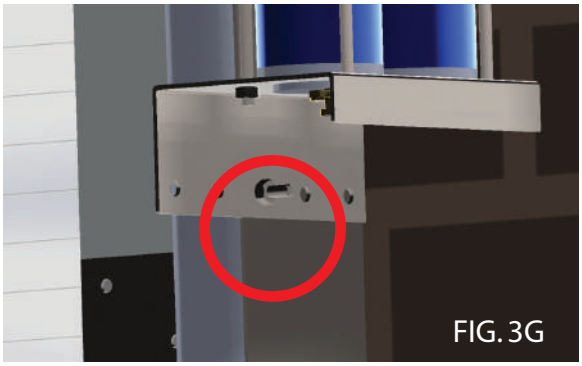
FIG. 3G

3-6: Rotate the chain turnbuckle until the chain is snug with minimal play in it. DO NOT OVERTIGHTEN. Tighten the locking nuts on both turnbuckle bolts to keep the turnbuckle from loosening.

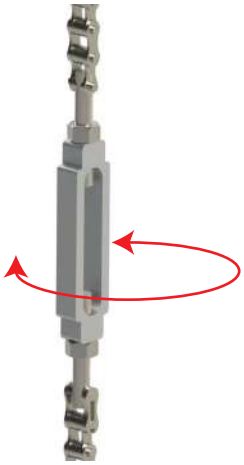

STEP 4 - SET OPENER LIMITS

4-1: Push the piston rod closest to the wall all the way down into the cylinder. Slide the aluminum collar onto the piston rod. Do not tighten the collar yet. (FIG. 4A)

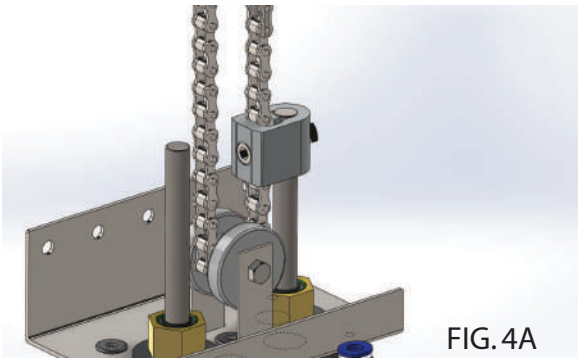

FIG. 4A

4-2: Raise the piston rod appoximately 1/2" from the "bottomed-out" position. Tighten both the allen set screw and the square head bolt on the collar to attach the collar to the piston rod. (FIG. 4B)

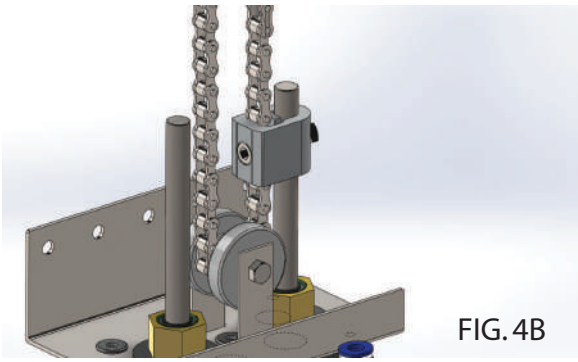

FIG. 4B

The closed limit is determined by where you attach the **rear** collar to the chain and **rear** piston rod with the piston rod all the way down.

4-3: Raise the door to the desired opening height. DO THIS SLOWLY TO ALLOW THE REAR PISTON ROD TO EXTEND AS YOU RAISE THE DOOR.

4-4: Make sure the piston rod furthest from the wall all the way down in the bottomed-out position. Slide the remaining aluminum collar onto the piston rod until approximately 1/2" of the rod extends through the collar. Tighten the allen set screw and square head bolt to secure the collar to the piston rod. (FIG. 4C)

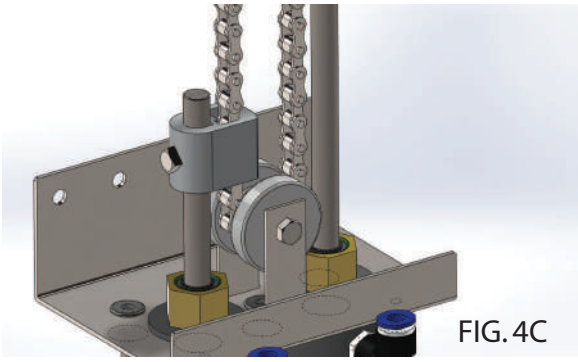

FIG. 4C

The open limit is determined by where you attach the **front** collar to the chain and **front** piston rod with the piston rod all the way down.

STEP 5 - INSTALL CONTROLS AND AIRLINE

NOTE The following control instructions pertain only to installations with individual door control boxes. If installing multi-door control boxes or other non-standard control configurations, please consult the factory @ 1-888-368-4403 for information and instructions relating to your exact installation.

NOTE These instructions assume that a main airline has already been plumbed from the air compressor to either side of the door.

5-1: Fasten the air regulator and any other accessories (air dryer, automatic oiler) to the main air inlet on the left side of your control box.

NOTE It is important to install the regulator and any accesories in the correct order. Please see the different configurations below and match your installation accordingly.

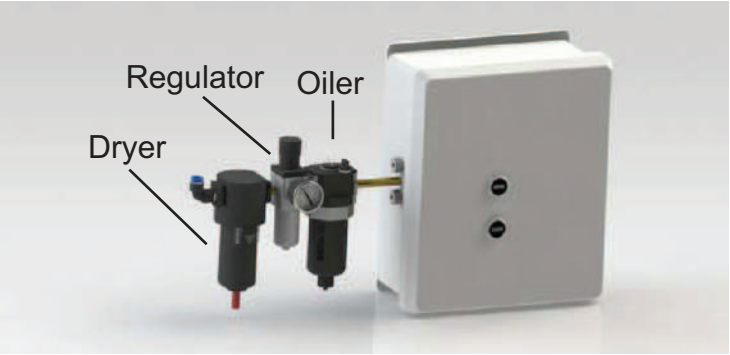

Option 1: Dryer - Regulator - Oiler

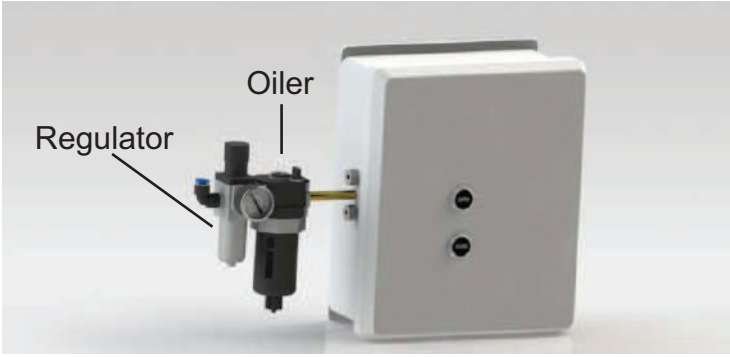

Option 2: Regulator - Oiler

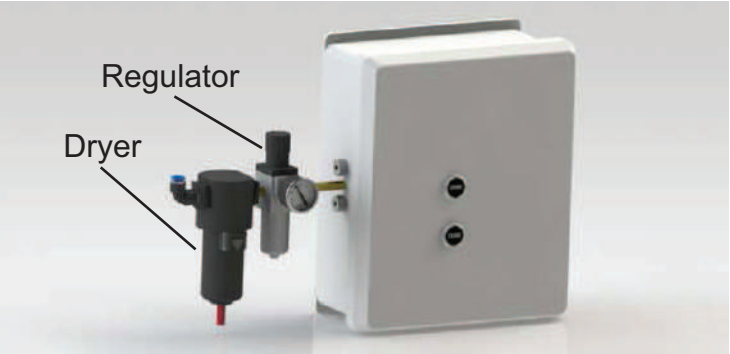

Option 3: Dryer - Regulator

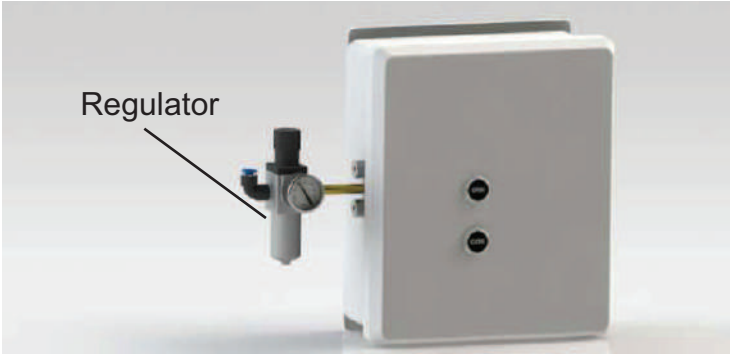

Option 4: Regulator

5-2: Mount the control box approximately 4' above the floor on the wall to which the main airline has been plumbed. (FIG. 5A)

5-2: Open the control box panel and run a 3/8" poly airline from the top outlet port of the valve to the FRONT (Furthest from wall) air fitting on the air opener. (FIG's. 5B & 5C)

5-3: Run a second 3/8" airline from the bottom outlet port on the valve to the REAR (closest to wall) air fitting on the air opener. (FIG's. 5D & 5E)

5-4: Connect your main airline to the air fitting on the left side of the air regulator attached to the control box. (FIG. 5F)

STEP 5 - INSTALL CONTROLS AND AIRLINE

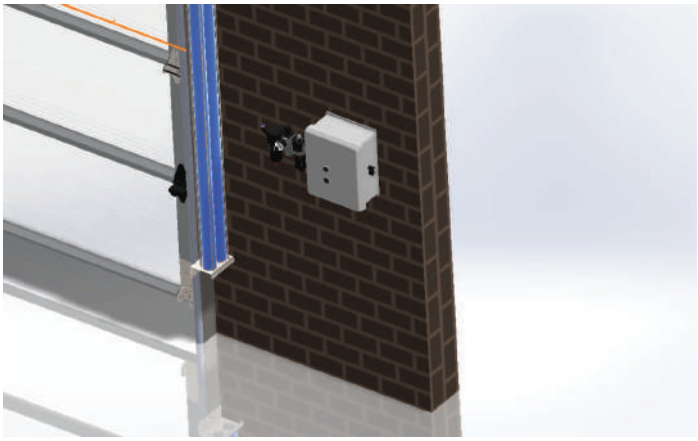

FIG. 5A

FIG. 5B

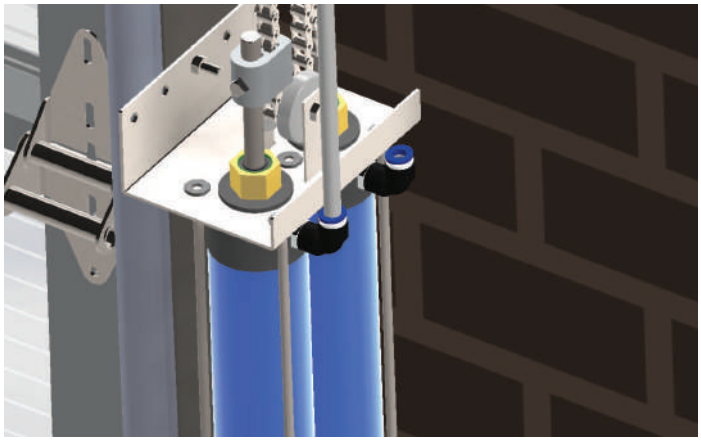

FIG. 5C

FIG. 5D

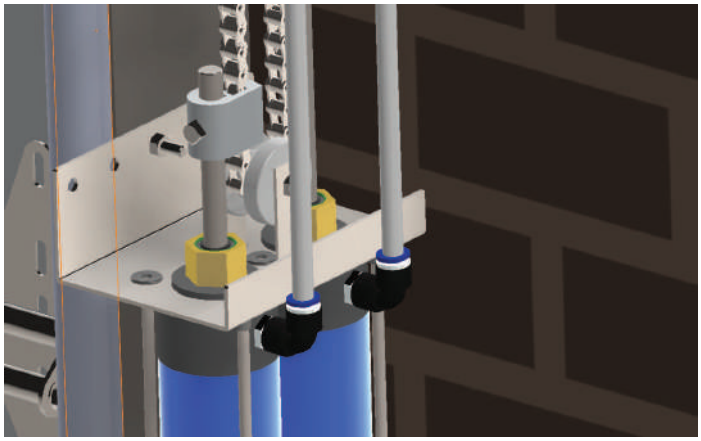

FIG. 5E

FIG. 5F

STEP 6 - INSTALL FLOW CONTROLS

6-1: Thread a brass flow control into each of the female threaded bushings on the left side of the control box. (FIG. 6A)

NOTE For shipping the flow controls are generally packed in a separate, smaller cardboard box. This box will be packed in the larger box that the control boxes were shipped in.

6-2: Loosen the round thumb screw on each flow control approximately 3/4 of the way out. (FIG. 6B)

FIG. 6A

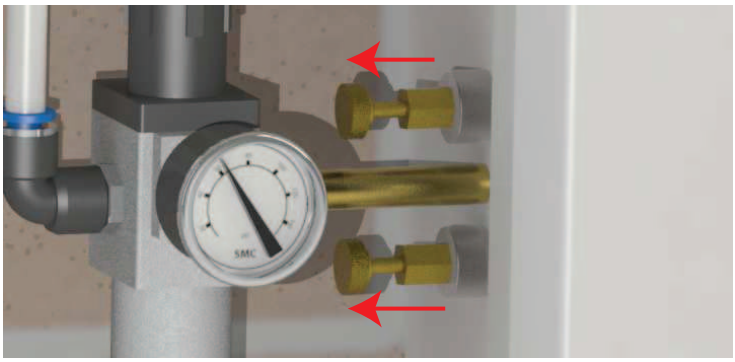

FIG. 6B

STEP 7 - ADJUST AIR PRESSURE AND TEST OPENER

CAUTION

****When adjusting the initial air pressure, be sure all personnel and equipment are clear of the door. The door may open when air pressure is first added to the regulator. The regulator is shipped from the factory with adjustment knob set at 0 psi.**

7-1: Increase the air pressure on the regulator by lifting up slightly on the top adjustment knob and turning the knob clockwise. Adjust the air pressure in the range of 40 - 80 psi.

7-2: Run the door open and closed to test for smooth operation.

7-3: See figures 7A and 7B for instructions on how to adjust the speed of the opener.

****Recommended closing speed is no more than 12" per second.**

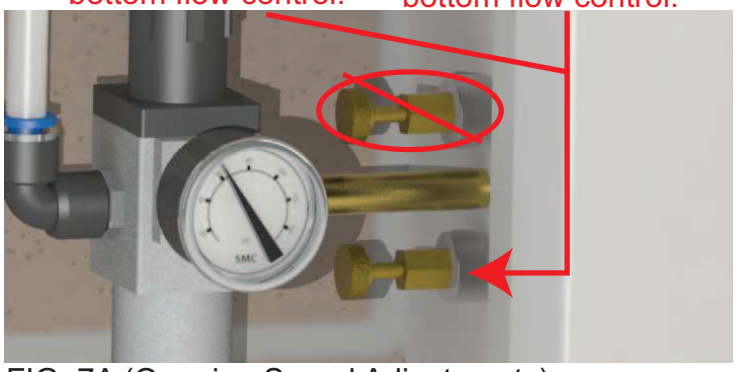

FIG. 7A (Opening Speed Adjustments)

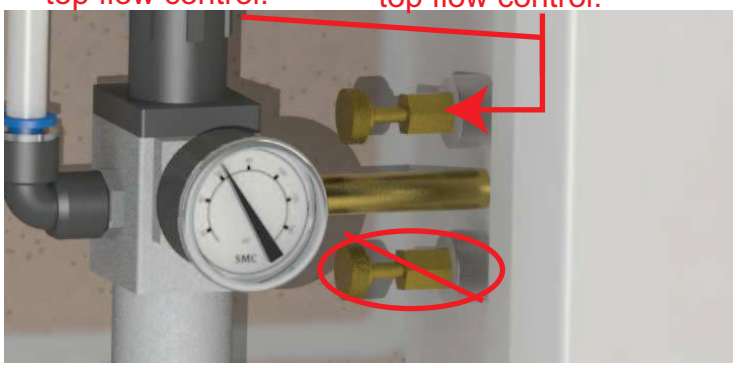

FIG. 7B (Closing Speed Adjustments)

****IMPORTANT** All control boxes supplied by Airlift Doors, Inc. require the use of a safety device to reverse the travel of the opener should the door opening become occupied by an obstruction. Only safety devices compatible with Airlift Doors controls may be used. Please note that without a compatible safety device installed, the opener will be unable to close.**

STEP 7 - ADJUST AIR PRESSURE AND TEST OPENER

7-4: Adjust cushion stop metering screws on the bottom of each cylinder. Each cylinder has an amount of cushion for the last 12" of travel which is determined by how tight the metering screw is tightened. To adjust the cushion stop for the close limit, turn the metering screw on the cylinder closest to the wall. Likewise, to adjust the cushion stop for the open limit, turn the metering screw on the cylinder furthest from the wall.

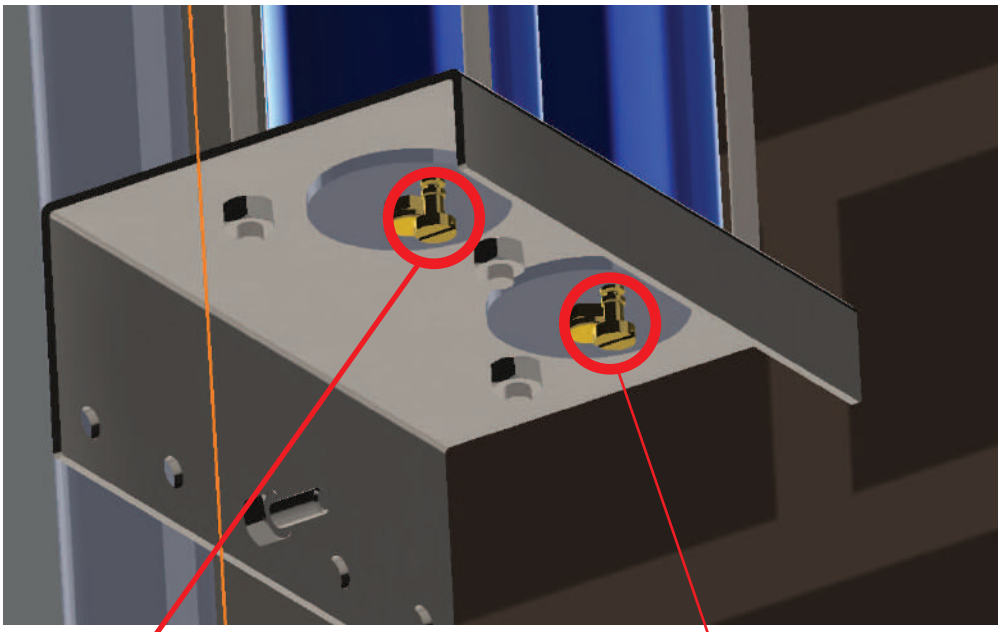

Tighten this metering screw to slow the door down the last 12" of open travel.

Loosen this metering screw to speed up the door the last 12" of open travel.

Tighten this metering screw to slow the door down the last 12" of close travel.

Loosen this metering screw to speed up the door the last 12" of close travel.

NOTE Adjustment of the metering screws as shown above only adjusts the speed of the opener for the last 12" of travel in each direction. Overall speed of the opener is set by adjusting the flow controls as explained in steps 7-1 through 7-3.

STEP 8 - INSTALL SAFETY EYES OR SIMILAR SAFETY DEVICE.

8-1: Airlift Doors, Inc. requires the use of a safety device capable of reversing the closing travel of the door in the event an obstacle enters the door opening during the closing cycle.

If safety eyes were purchased from Airlift Doors, Inc. for this opener, please follow the wiring instructions included in your order paperwork.

If a safety device other than those sold by Airlift Doors, Inc. are to be used, it is the responsibility of the installer to ensure the device or devices are installed properly and provide for the reverse of door travel as explained above.

ORIGINAL AIR OPERATOR COMPONENTS

PARTS DIAGRAM

1- PN# O02R2401-2409 RETAINING ROD
2- PN# O02R2501-2509 ALUM. TUBE
3- PN# O02R9506 O-RING
4- PN# O02R9210 CHECKBALL
5- PN# O02R9202 BOTTOM CAP
6- PN# D17R1402 1/4" NUT
7- PN# O02R9209 BREATHER VENT
8- PN# O02R9211 METERING SCREW
9- PN# O02R9301 BOTTOM MTG BRACKET
10- PN# O22R1101 3/8 x 1/8 SW AIR FITTING
11- PN# O02R9509 PISTON ROD SEAL (2)
12- PN# D17R2116 CHAIN GUIDE BOLT
13- PN# O02R9102 PISTON ROD COLLAR
14- PN# O02R9405 CHAIN ROLLER SLEEVE
15- PN# D17R1401 1/4" LOCK NUT
16- PN# O02R9404 CHAIN ROLLER
17- PN# O02R9401 CHAIN GUIDE BRACKET
18- PN# O02R9304 TOP MTG. BRACKET
19- PN# O02R2410 RETAINING ROD NUT
20- PN# O02R9207 TOP CAP BRASS NUT
21- PN# O02R9206 TOP CAP
22- PN#O02R2201-2209 PISTON ROD
23- PN#O02R9203 PISTON BODY
24- PN# O02R9508 U-CUP SEAL
25- PN# O02R9402 BRACKET BOLT
26- PN# O02R9510 SEAL RETAINER

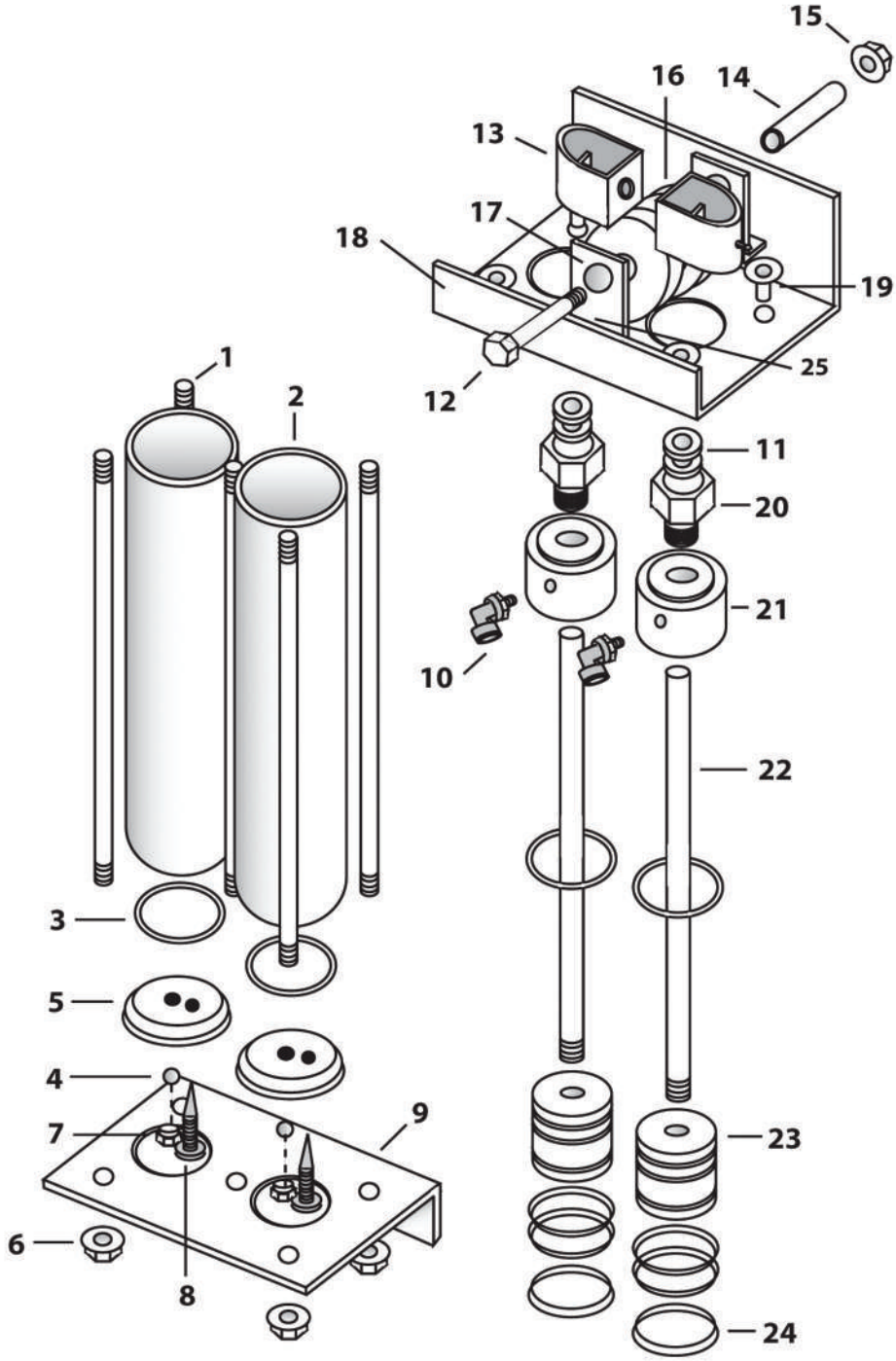

ALTERNATE TOP CAP ASSEMBLY FOR OLD STYLE OPERATORS